SANIFOS 110	
KIT	03/18

SANIFOS 110

INSTALLATION

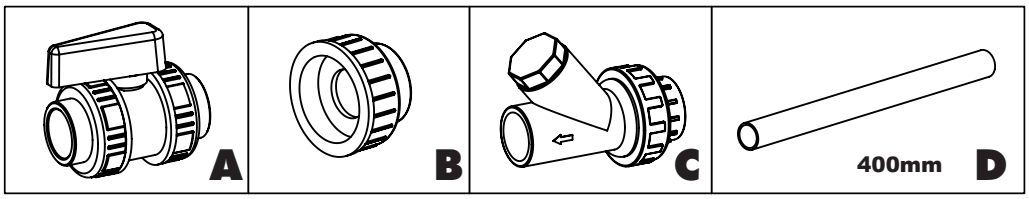

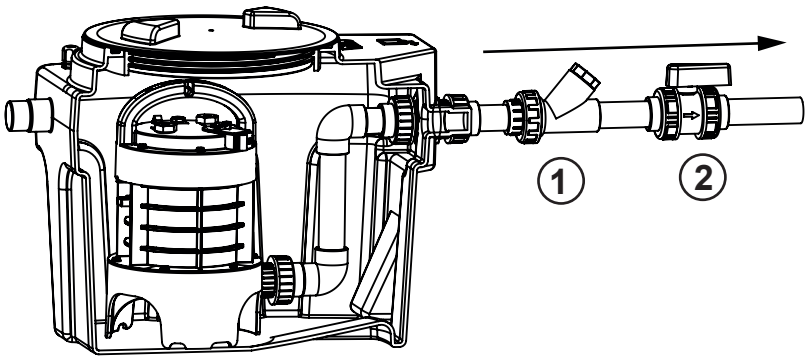

1

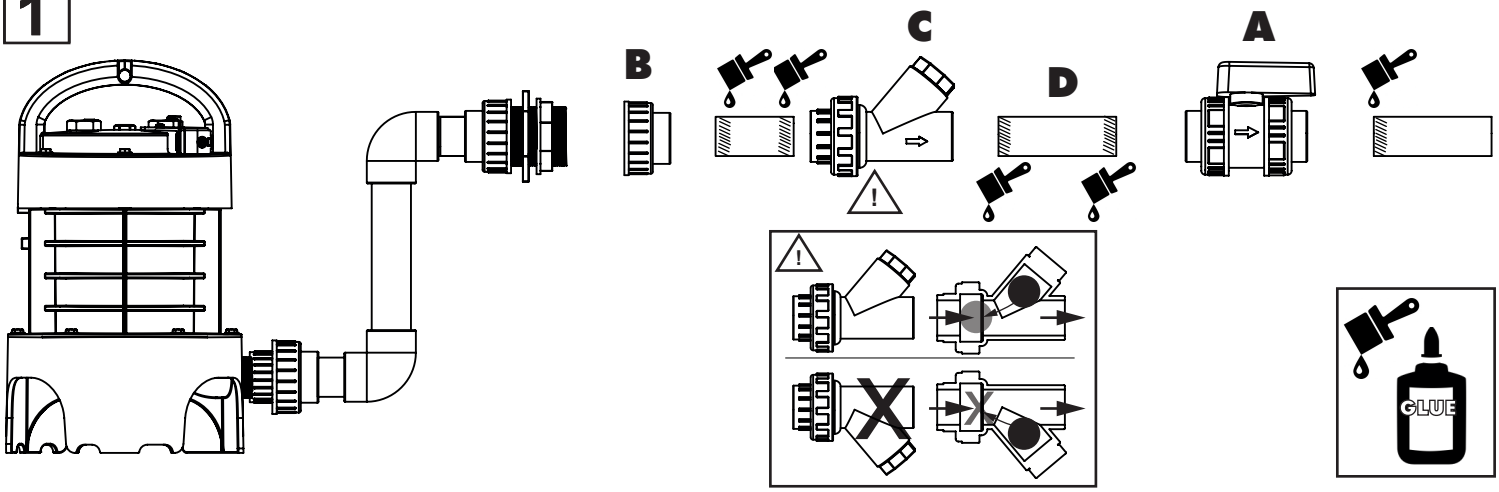

2

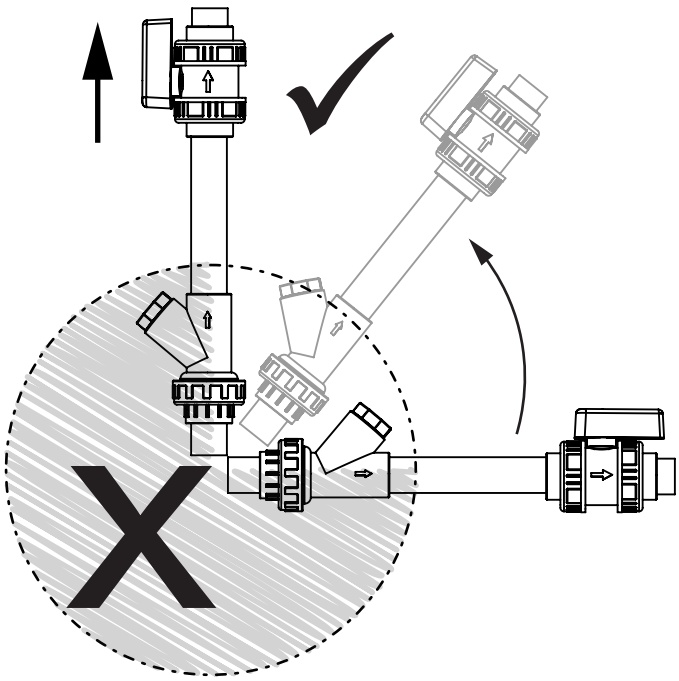
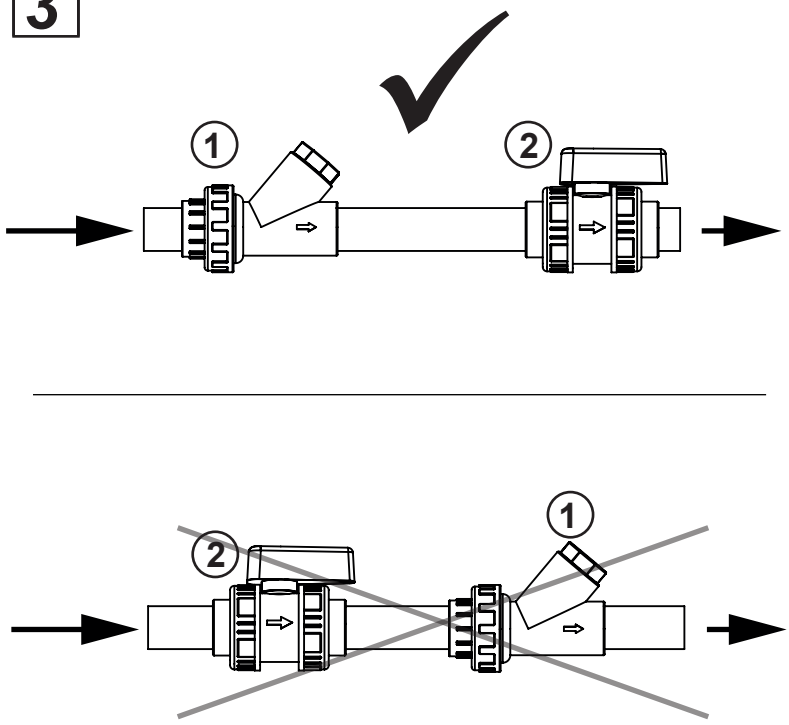
3