P706DR T-Koppling Förminskad CuxCuxCu

(Tee with all ends different)

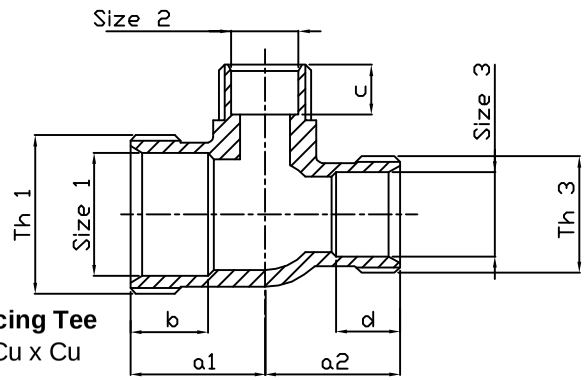

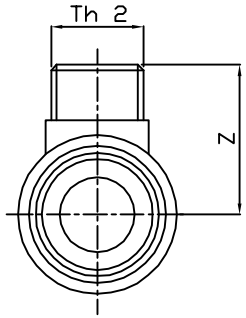

Reducing Tee
Cu x Cu x Cu

Product Code	Size 1	Size 2	Size 3	a1	a2	b	c	d	Z	Th 1	Th 2	Th 3
P706DR.1201	15	10	12	21	21	12.7	9	9	21	1/2"B.S.P	3/8"B.S.P	3/8"B.S.P
P706DR.1202	15	12	10	21	21	12.7	9	9	21	1/2"B.S.P	3/8"B.S.P	3/8"B.S.P
P706DR.150	18	12	15	27	26	12.7	9	12.7	27	ø23.8 x 14 T.P.I Whit	3/8"B.S.P	1/2"B.S.P
P706DR.151	18	15	12	27	26	12.7	12.7	9	26	ø23.8 x 14 T.P.I Whit	1/2"B.S.P	3/8"B.S.P
P706DR.1631	22	12	15	27	26	14	9	12.7	27	1 1/8" x 14 T.P.I Whit	3/8"B.S.P	1/2"B.S.P
P706DR.180	28	15	22	31	31	14	12.7	14	31	ø35.0 x 14 T.P.I Whit	1/2"B.S.P	1 1/8" x 14 T.P.I Whit
P706DR.182	22	28	15	31	31	14	14	12.7	27	1 1/8" x 14 T.P.I Whit	ø35.0 x 14 T.P.I Whit	1/2"B.S.P

Flowflex reserve the right to alter the product ranges and specifications contained in this drawing without prior notice

FLOWFLEX

TO BE USED FOR REFERENCE ONLY

First Angle Projection

PRODUCT MARKING =

Drawing Reference No P706DR Matrix