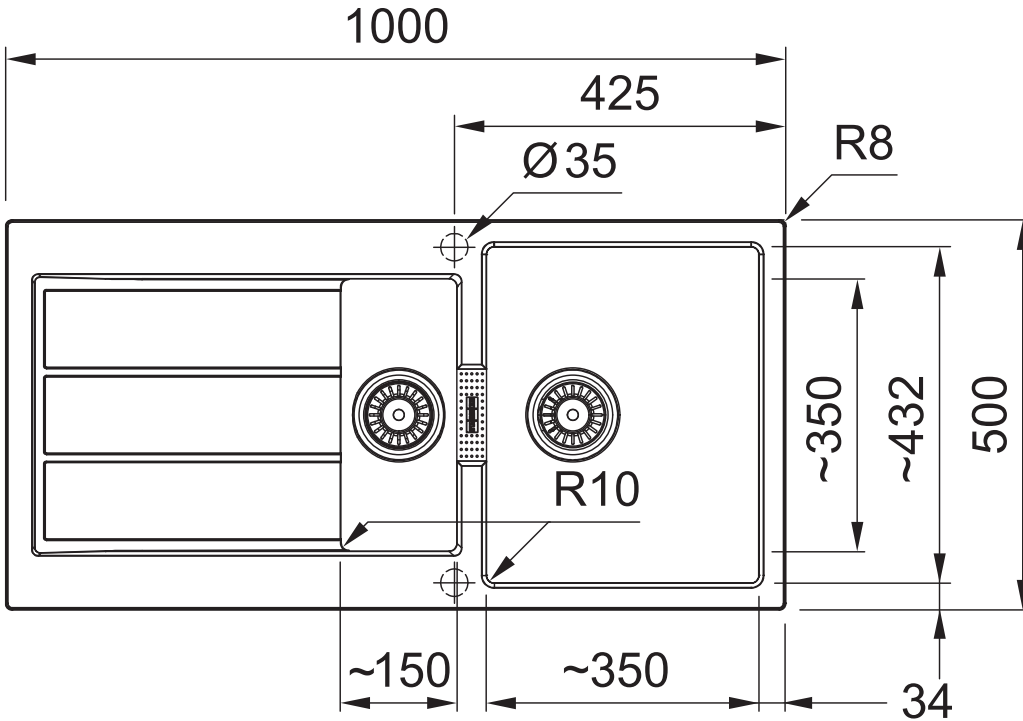
1000
425
Ø35
R8
~350
~432
500
R10
~150
~350
34