Area of Application:

Water

Details:
Aerator,M22x1

Materials in media contact:
Brass
SS
Rubber, EPDM
POM

Mounting:
M22x1

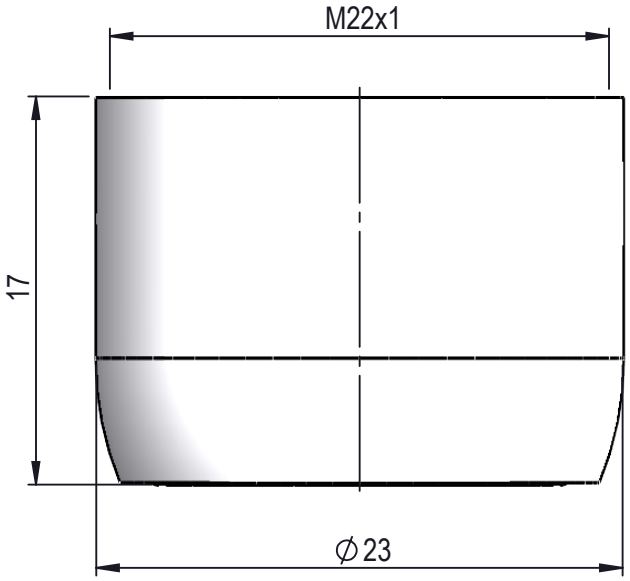

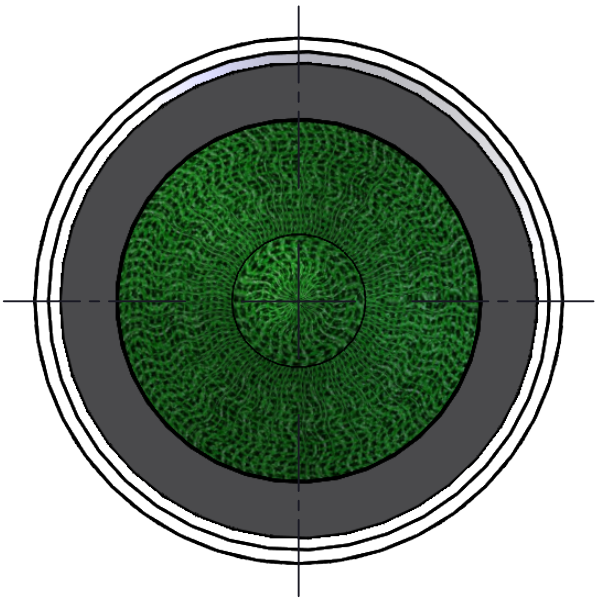

Description:
Aerator,M22x1

Rev.	Pos.	Date	TM No.	Design by	Drawn by:	Change:

Media: Water

Comments:

Drawing type: Customer drawing

Weight: 0.019 Kg

Designed by:	Drawn by:	Released on TM No.	Date:
BJP	BJP		30-09-10

Format: A4

Drawing No.: 25390061001

BROEN-LAB

This drawing is our property and cannot be given to a third party, copied or otherwise used without our permission. BROEN-LAB A/S.