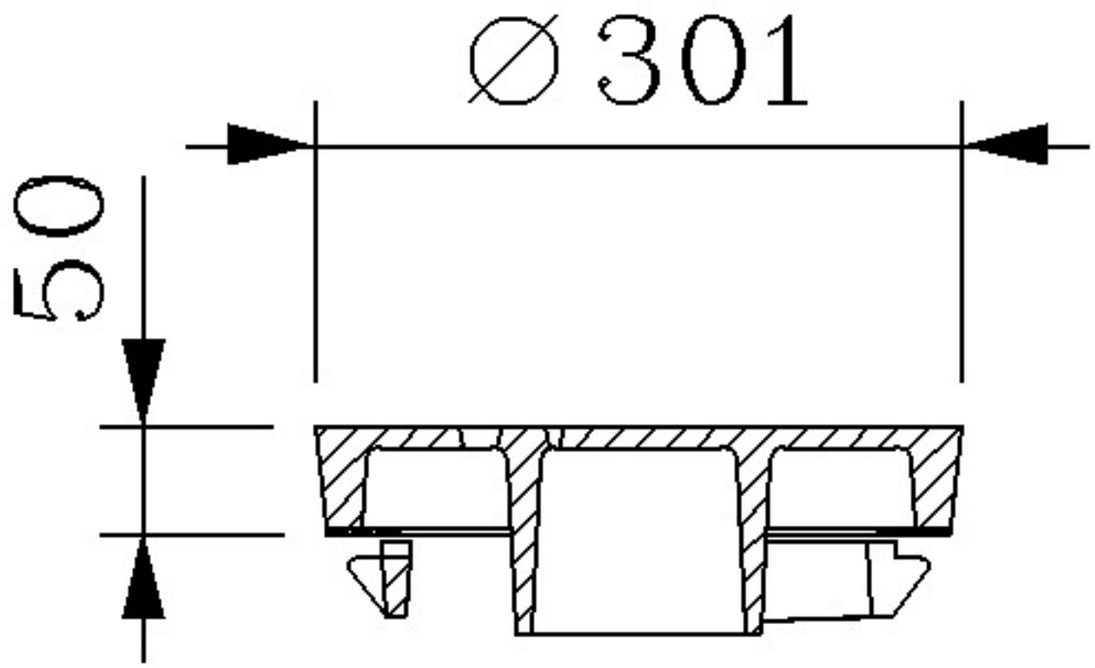

FURNES 2432