ENVIRONMENTAL PRODUCT DECLARATION

LK Pipe Fixture

In accordance with: ISO 14025:2006, EN 15804:2012+A2:2019/AC:2021

Products included in the EPD:

Pipefixture Quattro, Pipefixture Quattro CC50

An EPD may be updated or depublished if conditions change. To find the latest version of the EPD and to confirm its validity, see www.environdec.com

EPD of multiple products based on a representative product

EPD Owner
LK Systems

Programme
International EPD System
www.environdec.com

Programme operator
EPD International AB

Registration number
EPD-IES-0033032:001

Version date
2026-07-08

Validity date
2031-07-08

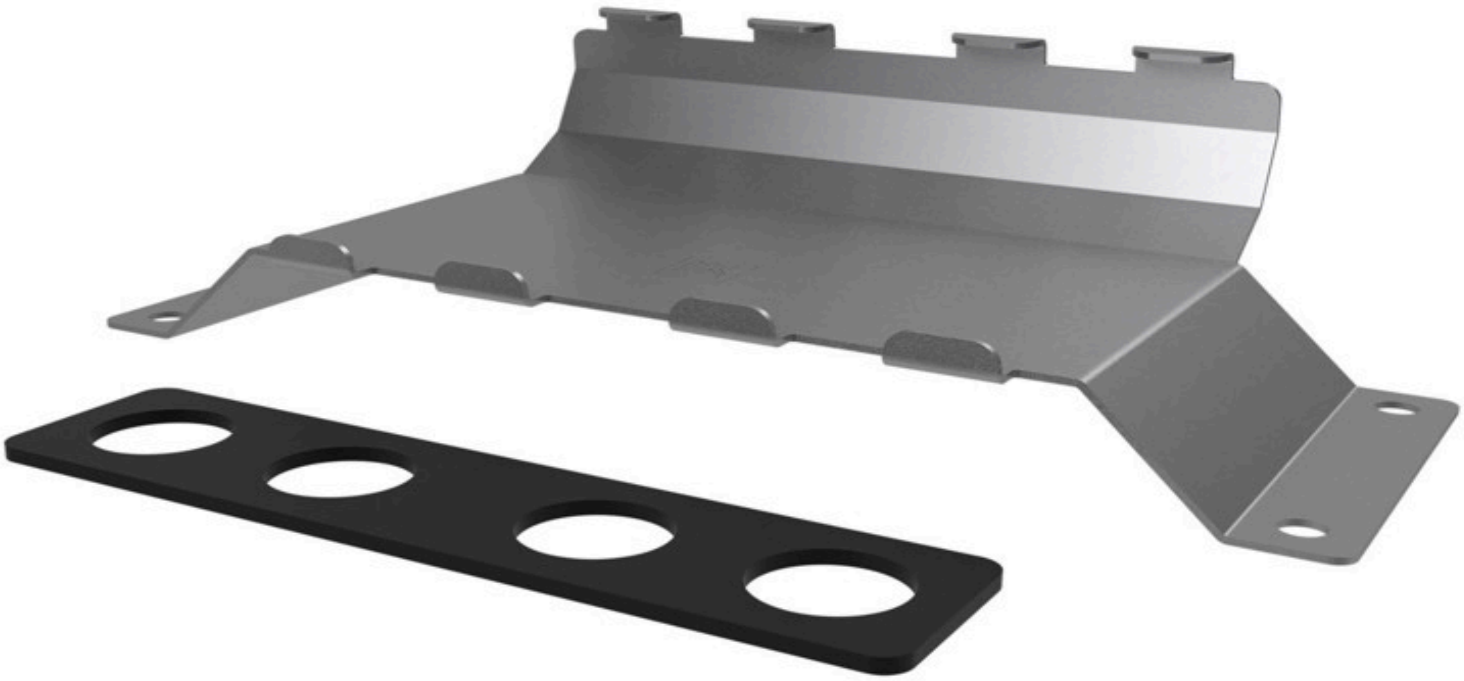

EPD INTERNATIONAL EPD SYSTEM

GENERAL INFORMATION

Programme information

Programme	International EPD System
Address	EPD International AB Box 210 60 SE-100 31 Stockholm Sweden
Website	www.environdec.com
E-mail	support@environdec.com

Product category rules

CEN standard EN 15804 serves as the Core Product Category Rules (PCR)	
Product Category Rules (PCR)	2019:14 Construction products (EN 15804+A2) (version 2.0.1) 2.0.1
PCR review was conducted by	The Technical Committee of the International EPD System. See www.environdec.com for a list of members. Review chair: Rob Rouwette (chair), Noa Meron (co-chair). The review panel may be contacted via the Secretariat www.environdec.com/support.

Verification

Independent third-party verification of the declaration and data, according to ISO 14025:2006, via	☐ EPD verification through an individual EPD verification ☐ EPD verification through EPD Process Certification* ☑ Fully pre-verified EPD tool
Tool name and version	LK Systems - Tyréns EPD generator, version 3.1.0
Third-party verifier, accountable for the tool and EPD verification	Pär Lindman, Miljögiraff
Approved by	The International EPD® System
Procedure for follow-up of data during EPD validity involves third party verifier	☐ Yes ☐ No
*EPD Process Certification involves an accredited certification body certifying and periodically auditing the EPD process and conducting external and independent verification of EPDs that are regularly published. More information can be found in the General Programme Instructions on www.environdec.com.	

Ownership and limitations on use of EPD

Limitations

EPDs within the same product category but published in different EPD programmes, may not be comparable. For two EPDs to be comparable, they shall be based on the same PCR (including the same first-digit version number) or be based on fully aligned PCRs or versions of PCRs; cover products with identical functions, technical performances and use (e.g. identical declared/functional units); have identical scope in terms of included life-cycle stages (unless the excluded life-cycle stage is demonstrated to be insignificant); apply identical impact assessment methods (including the same version of characterisation factors); and be valid at the time of comparison.

Ownership

The EPD Owner has the sole ownership, liability, and responsibility for the EPD.

INFORMATION ABOUT EPD OWNER

EPD Owner	LK Systems
Contact person name	LK Systems AB
Contact person e-mail	info@lksystems.se
Organisation address	Johannesfredsvägen 7 168 69 Bromma Sweden
LCA Practitioner	Olle Walter, olle.walter@lksystems.se and Olle Walter, olle.walter@lksystems.se

Description of the organisation of the EPD Owner

LK Systems is the leading manufacturer of easy-to-install systems for heating and tap water distribution in the Nordics. Through our prefabrication factory, we also provide tailor-made solutions that simplify the installation process even further. From idea to final solution, you can be sure of the smartest answers for your everyday challenges, today and tomorrow.

PRODUCT INFORMATION

Product name	Pipefixture Quattro
Product identification	1882504
Product description	Pipe fixture for embedded mounting of quattro radiator pipe connections. The fixture provides pipe spacing of 40–50–40 mm (centre-to-centre) and has a construction height of 70 mm. It is suitable for installation in floor structures with limited build-up height, such as HDF flooring.Production takes place in Kalix, Sweden, and includes punching, lasercutting, pressbrake bending and packaging.Values correspond to product number 1882699, which has been selected as the representative product since it accounts for 78% of the total sales volume for the product group.Recycled materials:Steel - 18,7%Climate impact from recycled material is0,58 kg CO2 eq. per kg (GWP-GHG)Climate impact from the energy mix in production is 0,07 kg CO2 eq. per kWh (GWP-GHG)
Technical purpose of product	Easy-to-install systems for heating and tap water distribution
Manufacturing or service provision description	The manufacturing process includes the manufacturing of the raw materials used for the final product. After the manufacturing of the product is completed, it is packed in product specific packaging, which is then stacked on a pallet and then transported to the warehouse. The production process flow contains the same or similar steps in all manufacturing locations for each material. See product information for detailed production process.
Material properties	Mass per piece: 0.431 kg/piece Volumetric mass density: 291 kg/m^3
Manufacturing site	LK Systems AB LK Systems AB 95231 Kalix Sweden
UN CPC code	41516. Tubes, pipes and tube or pipe fittings, of copper
Geographical scope(s)	Global

PRODUCT IMAGES

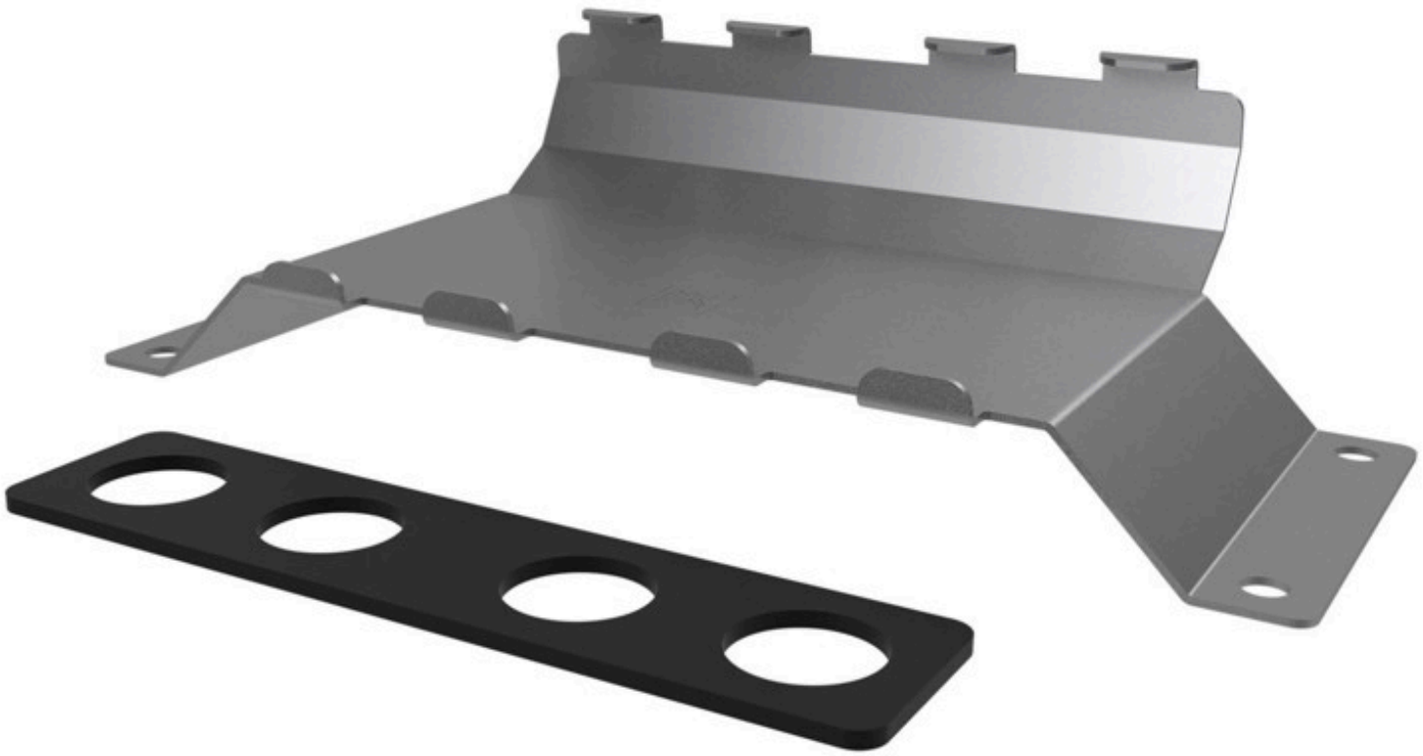

PRODUCT INFORMATION

Product name	Pipefixture Quattro CC50
Product identification	1882699
Product description	Pipe fixture for embedded mounting of quattro radiator pipe connections. The fixture provides pipe spacing of 40–50–40 mm (centre-to-centre) and has a construction height of 70 mm. It is suitable for installation in floor structures with limited build-up height, such as HDF flooring.Production takes place in Kalix, Sweden, and includes punching, lasercutting, pressbrake bending and packaging.Values correspond to product number 1882699, which has been selected as the representative product since it accounts for 78% of the total sales volume for the product group.Recycled materials:Steel - 18,7%Climate impact from recycled material is0,58 kg CO2 eq. per kg (GWP-GHG)Climate impact from the energy mix in production is 0,07 kg CO2 eq. per kWh (GWP-GHG)
Technical purpose of product	Easy-to-install systems for heating and tap water distribution
Manufacturing or service provision description	The manufacturing process includes the manufacturing of the raw materials used for the final product. After the manufacturing of the product is completed, it is packed in product specific packaging, which is then stacked on a pallet and then transported to the warehouse. The production process flow contains the same or similar steps in all manufacturing locations for each material. See product information for detailed production process.
Material properties	Mass per piece: 0.471 kg/piece Volumetric mass density: 291 kg/m^3
Manufacturing site	LK Systems AB LK Systems AB 95231 Kalix Sweden
UN CPC code	41516. Tubes, pipes and tube or pipe fittings, of copper
Geographical scope(s)	Global

PRODUCT IMAGES

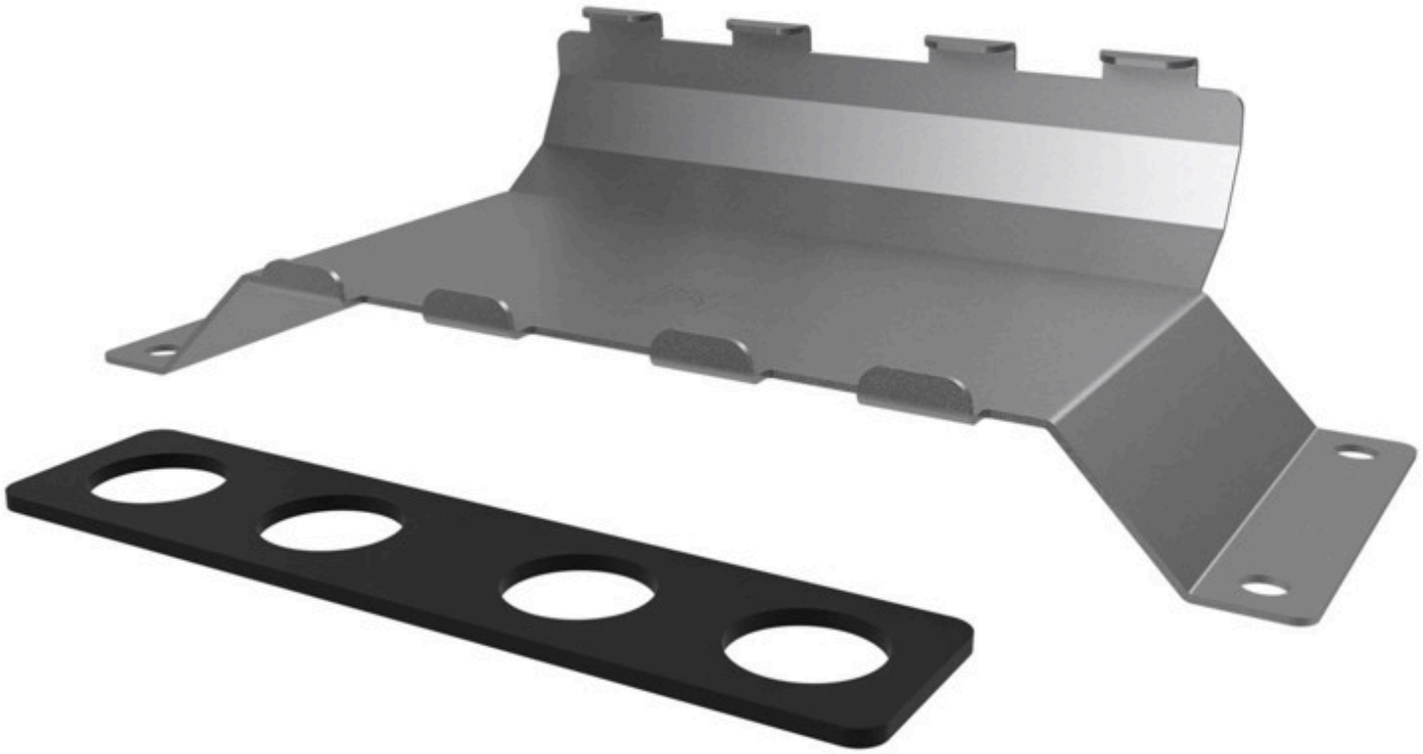

CONTENT DECLARATION

Content declaration of multiple products	The content is based on the representative product. For more information, see product description.
Hazardous and toxic substances	The product does not contain any substances from the SVHC candidate list in concentrations exceeding 0.1% of its weight.

PRODUCT CONTENT

Content name	Mass, kg	Post-consumer recycled material, mass-% of product	Biogenic material, mass-% of product	Biogenic material[1], kg C/declared unit
Steel	1.902	0	0	0
Zinc	0.023	0	0	0
Plastic	0.037	0	0	0
Aluminium	0.001	0	0	0
Total	**1.963**	**0**	**0**	**0**
Note 1	1 kg biogenic carbon is equivalent to 44/12 kg of CO_2			

PACKAGING MATERIALS

Material name	Mass, kg	Mass-% (versus the product)	Biogenic material[1], kg C/declared unit
Plastic	0.001	0.064	0
Cardboard box	0.04	2.038	0.02
Pallet	0.002	0.102	0.001
Total	**0.043**	**2.204**	**0.021**
Note 1	1 kg biogenic carbon is equivalent to 44/12 kg of CO_2		

LCA INFORMATION

EPD based on declared or functional unit	Declared unit
Declared unit and reference flow	LK Pipe Fixture Mass: 1 kg
Conversion factor to mass	2
Are infrastructure or capital goods included in any upstream, core or downstream processes?	☑ Yes ☐ No
Do infrastructure and capital goods contribute more than 10% to the A1-A3 (A1-A5 for services) results of any environmental impact indicator declared in the EPD?	☐ Yes ☑ No
Data sources used for this EPD	ecoinvent database (general) ecoinvent 3.10 database
LCA Software	SimaPro 10.3
Additional information about the underlying LCA-based information	Data is allocated for the energy use of the declared unit based on regular production rate. The raw materials necessary for manufacturing and the amount of packaging allocated to the product are based on the amount of material used to manufacture the declared unit, including waste. This EPD is generated with a fully pre-verified EPD tool. All processes are fixed and variable input data for each product governed by a menu. The review of the EPD-generator its constituent processes and the fixed content of the EPD is accepted based on the verification of the tool and the first EPD verification by the tool. Identification name and version number of the EPD-generator: EPD-generator 4.0.0 – LK Systems. For products containing any recycled material, this is visible and declared in the Content Declaration section. Since this EPD is generated with an EPD-generator some products but not all will include recycled brass and bronze. If the Content Declaration includes recycled Brass or Bronze, the following allocation is used for recycled materials. Recycled brass contain recycled copper (preconsumer scrap from copper anode). This copper is allocated as a by-product. Recycled bronze is post-consumer and all activities treating the products is included as well as transport to the treating facility or losses. Recycled PE contain recycled granulate. All activities treating the products are included as well as transport to the treating facility or losses are also accounted. Used Ecoinvent processes 3.10, Cut off: “Metal part of electronics scrap, in copper, anode, market for metal part of electronics scrap, in copper, anode, Global” , “Bronze scrap, post-consumer, market for bronze scrap, post-consumer, Global and “market for polyethylene, high density, granulate, recycled, India”.
Version of the EN 15804 reference package	EF Reference Package 3.1
Characterisation methods	EN 15804 reference package based on EF 3.1 has been used.
Technology description including background system	The raw materials in A1 consist of various materials used in the product and are declared in the Content Declaration section. These main materials can be used in different combinations in the production. Further product information and details about the production process are provided in the Product Description section. The transport distance in A2 is fixed and the transports are mainly made with trucks. In A3, the components are manufactured and assembled into complete systems for heating and tap water distribution, packed in product specific packaging and then transported to the warehouse.

Scrap (recycled material) inputs contribution level	Less than 10% of the GWP-GHG results in modules A1-A3 come from scrap inputs

Data quality assessment

Description of data quality assessment and reference years	When modeling in Simapro, Ecoinvent data (updated November 2024) has been used for secondary data. The database is considered to be of high quality. Primary data are related to amount of energy, transportation and direct emission used throughout module A1-A3. Other Indata gathered from the actual manufacturing plant with product-specific processes, specific amounts, specific waste, and spillage %, specific energy mix, specific transportation distances and transportation type and EPD's from some of the suppliers are primary data. Primary data are collected directly from supplier and production site. The reference year is 2023.

DATA QUALITY ASSESSMENT

Process name	Source type	Source	Reference year	Data category	Share of primary data, of GWP-GHG results for A1-A3
Manufacturing of product, inclusive generation of electricity used in manufacturing of product	Collected data & Databases	EPD Owner & Ecoinvent v 3.10	2023	Primary data	2%
Transport of materials & packaging to manufacturing site	Collected data & Databases	EPD Owner & Ecoinvent v 3.10	2023	Primary data	0%
Production of ingoing materials and packaging	EPDs & Databases	EPDs (confidential) & Ecoinvent v 3.10	< 5 years old	Primary data, secondary data	0%
Total share of primary data, of GWP-GHG results for A1-A3					**2%**
Note	The share of primary data is calculated based on GWP-GHG results. It is a simplified indicator for data quality that supports the use of more primary data to increase the representativeness of and comparability between EPDs. Note that the indicator does not capture all relevant aspects of data quality and is not comparable across product categories.				

ELECTRICITY USED IN THE MANUFACTURING PROCESS IN A3 (A5 FOR SERVICES)

Type of electricity mix	Specific electricity mix as generated, or purchased from an electricity supplier, demonstrated by a contractual instrument	
Energy sources	Hydro	3%
	Wind	20%
	Solar	29%
	Biomass	6%

	Geothermal	0%
	Waste	0%
	Nuclear	10%
	Natural gas	10%
	Coal	11%
	Oil	1%
	Peat	0%
	Other	10%
Climate impact (GWP-GHG):	0.07 kg CO_2 eq./kWh	

SYSTEM BOUNDARY

Description of the System boundary	b) Cradle to gate with options, modules C1-C4, module D and with optional modules (A1-A3 + C + D and additional modules).
Excluded modules	Yes, there is an excluded module, or there are excluded modules
Justification for omission of modules	No maintenance, replacement or energy use in usage stage, therefore is B1-B7 not included.

	Product stage			Construction process stage		Use stage							End of life stage				Beyond product life cycle
	Raw material supply	Transport	Manufacturing	Transport to site	Construction installation	Use	Maintenance	Repair	Replacement	Refurbishment	Operational energy use	Operational water use	De-construction demolition	Transport	Waste processing	Disposal	Reuse-Recovery-Recycling-potential
Module	A1	A2	A3	A4	A5	B1	B2	B3	B4	B5	B6	B7	C1	C2	C3	C4	D
Modules declared	X	X	X	X	X	ND	ND	ND	ND	ND	ND	ND	X	X	X	X	X
Geography	Global	Global	Sweden	Sweden	Sweden	N/A	N/A	N/A	N/A	N/A	N/A	N/A	Sweden	Sweden	Sweden	Sweden	Sweden
Share of specific data	2%			-	-	-	-	-	-	-	-	-	-	-	-	-	-
Variation - products	9%			-	-	-	-	-	-	-	-	-	-	-	-	-	-
Variation - sites	0%			-	-	-	-	-	-	-	-	-	-	-	-	-	-
Disclaimer	The share of specific/primary data and both variations (products and sites) refer to GWP-GHG results only.																

Process flow diagram(s) related images

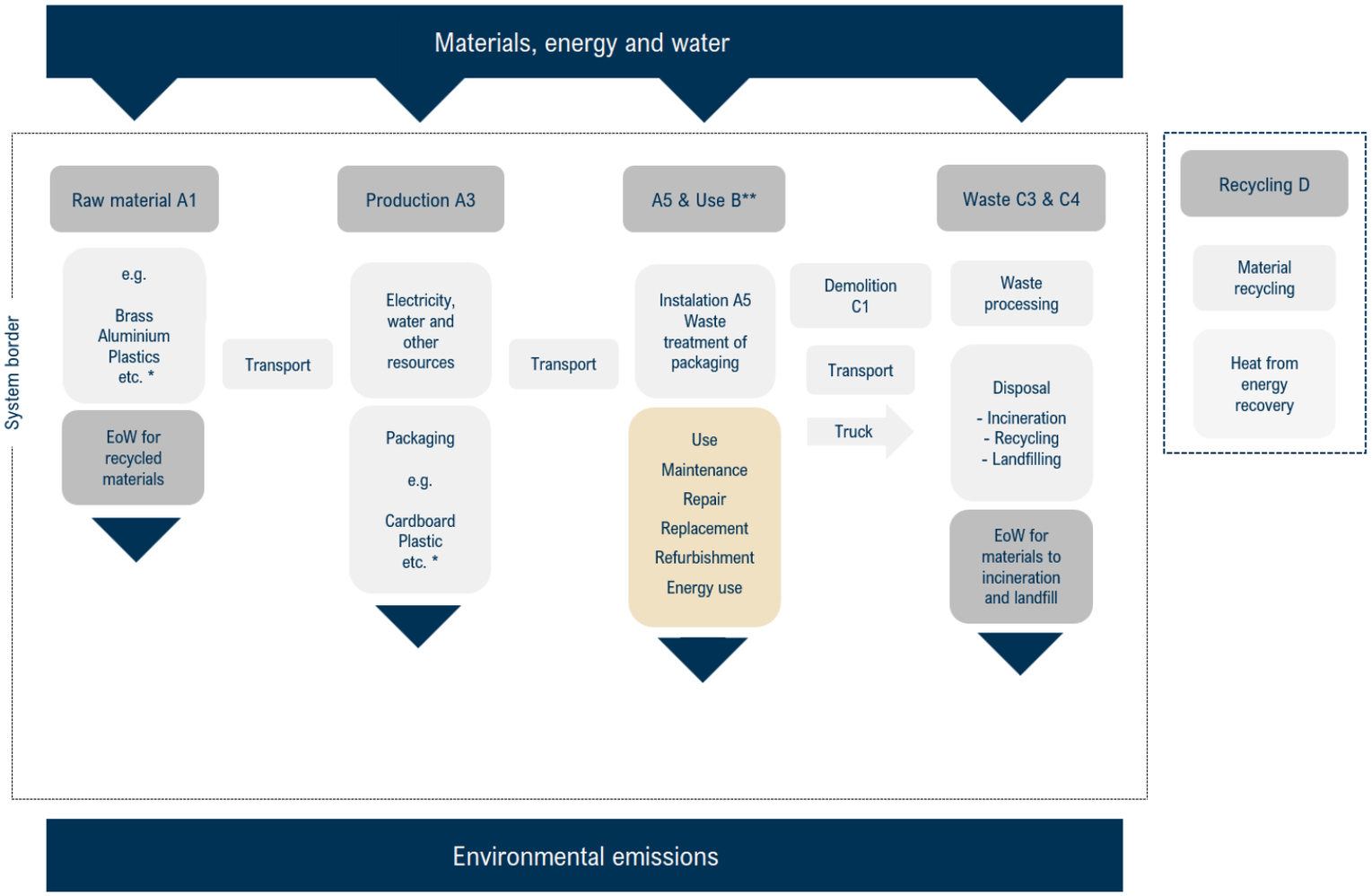

*Detailed material list in "Content information"
**B-modules are outside of system boundaries

DEFAULT SCENARIO

Name of the default scenario	Material and energy recycling and landfill
Description of the default scenario	The waste treatment assumption has led to the product being either incinerated for energy recovery, recycled for material use, or disposed of in a landfill

Module A4: Transport to the building site

Explanatory name of the default scenario in module A4	Transport to construction
Description of the default scenario in module A4	Transport to construction site. The distance can vary between products and is stated under Product description.

Module A5: Installation in the building

Explanatory name of the default scenario in module A5	Installation
Description of the default scenario in module A5	It is assumed that there are no environmental aspects during the installation of the product, except for the waste management of the packaging after installation.

Module C: End-of-life

Explanatory name of the default scenario in module C	Module C1-C4
Description of the default scenario in module C	The used product is assumed to be transported to a waste treatment site with a distance of 80 km for material recovery and landfill and 130 km for incineration. The waste treatment assumption has led to the product being either incinerated for energy recovery, recycled for material use, or disposed of in a landfill. The information regarding waste management is based on a Switzerland's study and this study is comparable to Swedish conditions. The following assumptions has been made: - Plastics are material recycled at 13% and the rest are incinerated for energy recovery. - Metals are material recycled at 95% and the rest are disposed of in a landfill. - Other materials are either incinerated for energy recovery or disposed of in a landfill at 100%. - Energy efficiency in municipal incinerator is 61%. The energy use in C1 is assumed to be 1.11 kWh/tonne according to PCR 2019:14 version 2.0.1.

Module D: Beyond product life cycle

Explanatory name of the default scenario in module D	Module D
Description of the default scenario in module D	For calculations in Module D following assumptions have been made: The recycled materials are replacing production of primary materials. Module D also contains benefits from exported energy from waste incineration declared in module C. Exported energy assumed to be 77 % heat and 23 % electricity from incineration.

ENVIRONMENTAL PERFORMANCE

The estimated impact results are only relative statements, which do not indicate the endpoints of the impact categories, exceeding threshold values, safety margins and/or risks.

Mandatory environmental performance indicators according to EN 15804

Impact category	Indicator	Unit	A1-A3	A4	A5	B1	B2	B3	B4	B5	B6	B7	C1	C2	C3	C4	D
Climate change - total	GWP-total	kg CO_2 eq.	2.77E+0	3.26E-1	6.59E-1	ND	ND	ND	ND	ND	ND	ND	3.97E-4	8.19E-1	1.37E-1	2.94E-4	-3.32E-1
Climate change - fossil	GWP-fossil	kg CO_2 eq.	2.77E+0	3.26E-1	7.65E-3	ND	ND	ND	ND	ND	ND	ND	3.97E-4	8.18E-1	1.10E-1	2.94E-4	-3.31E-1
Climate change - biogenic	GWP-biogenic	kg CO_2 eq.	-6.45E-3	2.26E-4	6.52E-1	ND	ND	ND	ND	ND	ND	ND	4.34E-8	5.67E-4	2.73E-2	4.05E-8	0.00E+0
Climate change - land use and land-use change	GWP-luluc	kg CO_2 eq.	2.33E-3	1.08E-4	2.30E-7	ND	ND	ND	ND	ND	ND	ND	3.45E-8	2.72E-4	1.09E-5	1.51E-7	-5.01E-4
Ozone depletion	ODP	kg CFC-11 eq.	2.17E-8	6.48E-9	1.50E-11	ND	ND	ND	ND	ND	ND	ND	6.07E-12	1.63E-8	2.46E-10	8.50E-12	-4.39E-9
Acidification	AP	mol H^+ eq.	1.15E-2	6.79E-4	5.66E-6	ND	ND	ND	ND	ND	ND	ND	3.58E-6	1.70E-3	1.24E-4	2.08E-6	-1.29E-3
Eutrophication aquatic freshwater	EP-freshwater	kg P eq.	1.18E-3	2.21E-5	4.28E-7	ND	ND	ND	ND	ND	ND	ND	1.16E-8	5.54E-5	5.42E-6	2.44E-8	-1.35E-4
Eutrophication aquatic marine	EP-marine	kg N eq.	2.64E-3	1.63E-4	2.79E-6	ND	ND	ND	ND	ND	ND	ND	1.66E-6	4.10E-4	4.04E-5	7.94E-7	-3.38E-4
Eutrophication terrestrial	EP-terrestrial	mol N eq.	2.79E-2	1.76E-3	2.64E-5	ND	ND	ND	ND	ND	ND	ND	1.82E-5	4.42E-3	4.25E-4	8.67E-6	-3.48E-3
Photochemical ozone formation	POCP	kg NMVOC eq.	9.39E-3	1.13E-3	7.72E-6	ND	ND	ND	ND	ND	ND	ND	5.42E-6	2.83E-3	1.23E-4	3.10E-6	-1.16E-3
Depletion of abiotic resources - minerals and metals	ADP-minerals&metals[1], [2]	kg Sb eq.	5.04E-5	1.06E-6	1.98E-9	ND	ND	ND	ND	ND	ND	ND	1.42E-10	2.66E-6	3.98E-7	4.59E-10	-2.22E-6
Depletion of abiotic resources - fossil fuels	ADP-fossil[1]	MJ, net calorific value	3.13E+1	3.81E-1	1.12E-3	ND	ND	ND	ND	ND	ND	ND	2.10E-4	9.57E-1	8.24E-2	4.46E-4	-2.29E+0
Water use	WDP[1]	m^3 world eq. deprived	1.18E+0	2.58E-2	5.81E-4	ND	ND	ND	ND	ND	ND	ND	1.52E-5	6.48E-2	1.63E-2	3.21E-4	-2.50E-1
Acronyms	GWP-fossil = Global Warming Potential fossil fuels; GWP-biogenic = Global Warming Potential biogenic; GWP-luluc = Global Warming Potential land use and land use change; ODP = Depletion potential of the stratospheric ozone layer; AP = Acidification potential, Accumulated Exceedance; EP-freshwater = Eutrophication potential, fraction of nutrients reaching freshwater end compartment; EP-marine = Eutrophication potential, fraction of nutrients reaching marine end compartment; EP-terrestrial = Eutrophication potential, Accumulated Exceedance; POCP = Formation potential of tropospheric ozone; ADP-minerals&metals = Abiotic depletion potential for non-fossil resources; ADP-fossil = Abiotic depletion for fossil resources potential; WDP = Water (user) deprivation potential, deprivation-weighted water consumption																
General disclaimer	The results of the end-of-life stage (modules C1-C4) should be considered when using the results of the product stage (modules A1-A3/A1-A5 for services).																
Disclaimer 1	The results of this environmental impact indicator shall be used with care as the uncertainties of these results are high or as there is limited experience with the indicator																
Disclaimer 2	The results of the impact categories abiotic depletion of minerals and metals may be highly uncertain in LCAs that include capital goods/infrastructure in generic datasets, in case infrastructure/capital goods contribute greatly to the total results. This is because the LCI data of infrastructure/capital goods used to quantify these indicators in currently available generic datasets sometimes lack temporal, technological and geographical representativeness. Caution should be exercised when using the results of these indicators for decision-making purposes.																

Additional mandatory environmental performance indicators

Impact category	Indicator	Unit	A1-A3	A4	A5	B1	B2	B3	B4	B5	B6	B7	C1	C2	C3	C4	D
Climate change - GWP-GHG	GWP-GHG[1]	kg CO_2 eq.	2.78E+0	3.26E-1	7.65E-3	ND	ND	ND	ND	ND	ND	ND	3.97E-4	8.19E-1	1.10E-1	2.94E-4	-3.34E-1
Acronyms	GWP-GHG = Global warming potential greenhouse gas.																
General disclaimer	The results of the end-of-life stage (modules C1-C4) should be considered when using the results of the product stage (modules A1-A3/A1-A5 for services).																
Disclaimer 1	The GWP-GHG indicator is termed GWP-IOBC/GHG in the ILCD+EPD+ data format. The indicator accounts for all greenhouse gases except biogenic carbon dioxide uptake and emissions and biogenic carbon stored in the product. As such, the indicator is identical to GWP-total except that the CF for biogenic CO_2 is set to zero.																

Additional voluntary environmental performance indicators according to EN 15804

Impact category	Indicator	Unit	A1-A3	A4	A5	B1	B2	B3	B4	B5	B6	B7	C1	C2	C3	C4	D
Particulate matter emissions	PM	Disease incidence	1.99E-7	2.40E-8	3.19E-10	ND	ND	ND	ND	ND	ND	ND	1.02E-10	6.03E-8	1.78E-9	4.74E-11	-4.16E-8
Ionizing radiation - human health	IRP[1]	kBq U235 eq.	1.01E+0	5.95E-3	1.78E-5	ND	ND	ND	ND	ND	ND	ND	2.33E-6	1.49E-2	2.85E-3	4.60E-6	-7.51E-2
Eco-toxicity - freshwater	ETP-fw[2, 3]	CTUe	1.43E+2	1.25E+0	2.39E-2	ND	ND	ND	ND	ND	ND	ND	7.36E-4	3.13E+0	3.86E-1	9.85E-4	-2.51E+0
Human toxicity - cancer effects	HTP-c[2, 3]	CTUh	4.87E-7	2.31E-9	7.87E-12	ND	ND	ND	ND	ND	ND	ND	1.55E-12	5.81E-9	3.00E-10	1.33E-12	-5.79E-9
Human toxicity - non-cancer effects	HTP-nc[2, 3]	CTUh	2.93E-8	2.88E-9	6.03E-11	ND	ND	ND	ND	ND	ND	ND	6.42E-13	7.23E-9	7.61E-10	1.23E-12	-1.34E-8
Land-use related impacts/soil quality	SQP[2, 3]	Dimensionless	1.40E+1	2.77E+0	5.51E-3	ND	ND	ND	ND	ND	ND	ND	3.65E-4	6.96E+0	8.86E-1	1.42E-2	-2.00E+0
Acronyms	PM = Potential incidence of disease due to particulate matter emissions; IRP = Potential human exposure efficiency relative to U235; ETP-fw = Potential comparative toxic unit for ecosystems; HTP-c = Potential comparative toxic unit for humans; HTP-nc = Potential comparative toxic unit for humans; SQP = Potential soil quality index.																
General disclaimer	The results of the end-of-life stage (modules C1-C4) should be considered when using the results of the product stage (modules A1-A3/A1-A5 for services).																
Disclaimer 1	This impact category deals mainly with the eventual impact of low dose ionizing radiation on human health of the nuclear fuel cycle. It does not consider effects due to possible nuclear accidents, occupational exposure nor due to radioactive waste disposal in underground facilities. Potential ionizing radiation from the soil, from radon and from some construction materials is also not measured by this indicator.																
Disclaimer 2	The results of this environmental impact indicator shall be used with care as the uncertainties of these results are high or as there is limited experience with the indicator.																
Disclaimer 3	The results of the impact categories land use, human toxicity (cancer), human toxicity, noncancer and ecotoxicity (freshwater) may be highly uncertain in LCAs that include capital goods/infrastructure in generic datasets, in case infrastructure/capital goods contribute greatly to the total results. This is because the LCI data of infrastructure/capital goods used to quantify these indicators in currently available generic datasets sometimes lack temporal, technological and geographical representativeness. Caution should be exercised when using the results of these indicators for decision-making purposes.																

Resource use indicators according to EN 15804

Indicator	Unit	A1-A3	A4	A5	B1	B2	B3	B4	B5	B6	B7	C1	C2	C3	C4	D
PERE	MJ, net calorific value	4.38E+0	7.87E-2	2.72E-4	ND	ND	ND	ND	ND	ND	ND	3.19E-5	1.98E-1	7.99E-2	6.69E-5	-1.41E+0
PERM	MJ, net calorific value	6.14E-1	0.00E+0	-5.80E-1	ND	ND	ND	ND	ND	ND	ND	0.00E+0	0.00E+0	0.00E+0	0.00E+0	0.00E+0
PERT	MJ, net calorific value	4.99E+0	7.87E-2	-5.80E-1	ND	ND	ND	ND	ND	ND	ND	3.19E-5	1.98E-1	7.99E-2	6.69E-5	-1.41E+0
PENRE	MJ, net calorific value	3.23E+1	3.98E-1	1.17E-3	ND	ND	ND	ND	ND	ND	ND	2.20E-4	9.99E-1	8.43E-2	4.67E-4	-2.35E+0
PENRM	MJ, net calorific value	1.53E+0	0.00E+0	-5.00E-2	ND	ND	ND	ND	ND	ND	ND	0.00E+0	0.00E+0	-1.48E+0	0.00E+0	0.00E+0
PENRT	MJ, net calorific value	3.38E+1	3.98E-1	-4.88E-2	ND	ND	ND	ND	ND	ND	ND	2.20E-4	9.99E-1	-1.40E+0	4.67E-4	-2.35E+0
SM	kg	1.76E-1	0.00E+0	0.00E+0	ND	ND	ND	ND	ND	ND	ND	0.00E+0	0.00E+0	0.00E+0	0.00E+0	0.00E+0
RSF	MJ, net calorific value	0.00E+0	0.00E+0	0.00E+0	ND	ND	ND	ND	ND	ND	ND	0.00E+0	0.00E+0	0.00E+0	0.00E+0	0.00E+0
NRSF	MJ, net calorific value	0.00E+0	0.00E+0	0.00E+0	ND	ND	ND	ND	ND	ND	ND	0.00E+0	0.00E+0	0.00E+0	0.00E+0	0.00E+0
FW	m^3	4.60E+2	9.34E-4	2.81E-5	ND	ND	ND	ND	ND	ND	ND	6.20E-7	2.34E-3	6.29E-4	8.00E-6	-7.55E-3
Acronyms	PERE = Use of renewable primary energy excluding renewable primary energy resources used as raw materials; PERM = Use of renewable primary energy resources used as raw materials; PERT = Total use of renewable primary energy resources; PENRE = Use of non-renewable primary energy excluding non-renewable primary energy resources used as raw materials; PENRM = Use of non-renewable primary energy resources used as raw materials; PENRT = Total use of non-renewable primary energy re-sources; SM = Use of secondary material; RSF = Use of renewable secondary fuels; NRSF = Use of non-renewable secondary fuels; FW = Use of net fresh water.															
General disclaimer	The results of the end-of-life stage (modules C1-C4) should be considered when using the results of the product stage (modules A1-A3/A1-A5 for services).															

Waste indicators according to EN 15804

Indicator	Unit	A1-A3	A4	A5	B1	B2	B3	B4	B5	B6	B7	C1	C2	C3	C4	D
HWD	kg	0.00E+0	0.00E+0	0.00E+0	ND	ND	ND	ND	ND	ND	ND	0.00E+0	0.00E+0	0.00E+0	0.00E+0	0.00E+0
NHWD	kg	0.00E+0	0.00E+0	0.00E+0	ND	ND	ND	ND	ND	ND	ND	0.00E+0	0.00E+0	0.00E+0	0.00E+0	0.00E+0
RWD	kg	0.00E+0	0.00E+0	0.00E+0	ND	ND	ND	ND	ND	ND	ND	0.00E+0	0.00E+0	0.00E+0	0.00E+0	0.00E+0
Acronyms	HWD = Hazardous waste disposed; NHWD = Non-hazardous waste disposed; RWD = Radioactive waste disposed.															
General disclaimer	The results of the end-of-life stage (modules C1-C4) should be considered when using the results of the product stage (modules A1-A3/A1-A5 for services).															

Output flow indicators according to EN 15804

Indicator	Unit	A1-A3	A4	A5	B1	B2	B3	B4	B5	B6	B7	C1	C2	C3	C4	D
CRU	kg	0.00E+0	0.00E+0	0.00E+0	ND	ND	ND	ND	ND	ND	ND	0.00E+0	0.00E+0	0.00E+0	0.00E+0	0.00E+0
MFR	kg	0.00E+0	0.00E+0	3.14E-2	ND	ND	ND	ND	ND	ND	ND	0.00E+0	0.00E+0	8.98E-1	0.00E+0	0.00E+0
MER	kg	0.00E+0	0.00E+0	0.00E+0	ND	ND	ND	ND	ND	ND	ND	0.00E+0	0.00E+0	0.00E+0	0.00E+0	0.00E+0
EEE	MJ, net calorific value	0.00E+0	0.00E+0	2.43E-2	ND	ND	ND	ND	ND	ND	ND	0.00E+0	0.00E+0	1.81E-1	0.00E+0	0.00E+0
EET	MJ, net calorific value	0.00E+0	0.00E+0	8.14E-2	ND	ND	ND	ND	ND	ND	ND	0.00E+0	0.00E+0	6.05E-1	0.00E+0	0.00E+0
Acronyms	CRU = Components for re-use; MFR = Materials for recycling; MER = Materials for energy recovery; EEE = Exported electrical energy; EET = Exported thermal energy.															
General disclaimer	The results of the end-of-life stage (modules C1-C4) should be considered when using the results of the product stage (modules A1-A3/A1-A5 for services).															

Results of an alternative modelling approach

Description of the scenario/method	100% of production go to energy or material recycling for module C.

Impact category	Indicator	Unit	A1-A3	A4	A5	B1	B2	B3	B4	B5	B6	B7	C1	C2	C3	C4	D
Climate change - fossil	GWP-fossil	kg CO2 eq.	2.77E+0	3.26E-1	7.65E-3	ND	ND	ND	ND	ND	ND	ND	3.97E-4	1.48E-2	4.80E-2	0.00E+0	-4.76E-1
Climate change - biogenic	GWP-biogenic	kg CO2 eq.	-6.45E-3	2.26E-4	6.52E-1	ND	ND	ND	ND	ND	ND	ND	4.34E-8	1.03E-5	2.87E-2	0.00E+0	-1.08E-2
Climate change - land use and land-use change	GWP-luluc	kg CO2 eq.	2.33E-3	1.08E-4	2.30E-7	ND	ND	ND	ND	ND	ND	ND	3.45E-8	4.93E-6	1.86E-5	0.00E+0	-2.48E-4
Climate change - total	GWP-total	kg CO2 eq.	2.77E+0	3.26E-1	6.59E-1	ND	ND	ND	ND	ND	ND	ND	3.97E-4	1.49E-2	7.67E-2	0.00E+0	-4.87E-1
Ozone depletion	ODP	kg CFC-11 eq.	2.17E-8	6.48E-9	1.50E-11	ND	ND	ND	ND	ND	ND	ND	6.07E-12	2.95E-10	3.86E-10	0.00E+0	-9.12E-9
Acidification	AP	mol H+ eq.	1.15E-2	6.79E-4	5.66E-6	ND	ND	ND	ND	ND	ND	ND	3.58E-6	3.09E-5	1.47E-4	0.00E+0	-1.77E-3
Eutrophication aquatic freshwater	EP-freshwater	kg P eq.	1.18E-3	2.21E-5	4.28E-7	ND	ND	ND	ND	ND	ND	ND	1.16E-8	1.01E-6	7.19E-6	0.00E+0	-1.71E-4
Eutrophication aquatic marine	EP-marine	kg N eq.	2.64E-3	1.63E-4	2.79E-6	ND	ND	ND	ND	ND	ND	ND	1.66E-6	7.43E-6	4.64E-5	0.00E+0	-4.25E-4
Eutrophication terrestrial	EP-terrestrial	mol N eq.	2.79E-2	1.76E-3	2.64E-5	ND	ND	ND	ND	ND	ND	ND	1.82E-5	8.02E-5	4.71E-4	0.00E+0	-4.61E-3
Photochemical ozone formation	POCP	kg NMVOC eq.	9.39E-3	1.13E-3	7.72E-6	ND	ND	ND	ND	ND	ND	ND	5.42E-6	5.14E-5	1.52E-4	0.00E+0	-1.86E-3
Depletion of abiotic resources - minerals and metals	ADP-minerals&metals	kg Sb eq.	5.04E-5	1.06E-6	1.98E-9	ND	ND	ND	ND	ND	ND	ND	1.42E-10	4.83E-8	4.68E-7	0.00E+0	-3.55E-6
Depletion of abiotic resources - fossil fuels	ADP-fossil	MJ, net calorific value	3.13E+1	3.81E-1	1.12E-3	ND	ND	ND	ND	ND	ND	ND	2.10E-4	1.74E-2	1.13E-1	0.00E+0	-3.05E+0
Water use	WDP	m3 world eq. deprived	1.18E+0	2.58E-2	5.81E-4	ND	ND	ND	ND	ND	ND	ND	1.52E-5	1.18E-3	1.55E-2	0.00E+0	-3.00E-1
Acronyms																	
Disclaimers																	
General disclaimer	The results of the end-of-life stage (modules C1-C4) should be considered when using the results of the product stage (modules A1-A3/A1-A5 for services).																

Results of an alternative modelling approach

Description of the scenario/method	100% of the product go to landfill in module C.

Impact category	Indicator	Unit	A1-A3	A4	A5	B1	B2	B3	B4	B5	B6	B7	C1	C2	C3	C4	D
Climate change - fossil	GWP-fossil	kg CO2 eq.	2.77E+0	3.26E-1	7.65E-3	ND	ND	ND	ND	ND	ND	ND	3.97E-4	1.48E-2	0.00E+0	8.56E-3	0.00E+0
Climate change - biogenic	GWP-biogenic	kg CO2 eq.	-6.45E-3	2.26E-4	6.52E-1	ND	ND	ND	ND	ND	ND	ND	4.34E-8	1.03E-5	0.00E+0	1.84E-5	0.00E+0
Climate change - land use and land-use change	GWP-luluc	kg CO2 eq.	2.33E-3	1.08E-4	2.30E-7	ND	ND	ND	ND	ND	ND	ND	3.45E-8	4.93E-6	0.00E+0	9.56E-7	0.00E+0
Climate change - total	GWP-total	kg CO2 eq.	2.77E+0	3.26E-1	6.59E-1	ND	ND	ND	ND	ND	ND	ND	3.97E-4	1.49E-2	0.00E+0	8.58E-3	0.00E+0

Ozone depletion	ODP	kg CFC-11 eq.	2.17E-8	6.48E-9	1.50E-11	ND	ND	ND	ND	ND	ND	ND	6.07E-12	2.95E-10	0.00E+0	2.19E-10	0.00E+0
Acidification	AP	mol H+ eq.	1.15E-2	6.79E-4	5.66E-6	ND	ND	ND	ND	ND	ND	ND	3.58E-6	3.09E-5	0.00E+0	3.69E-5	0.00E+0
Eutrophication aquatic freshwater	EP-freshwater	kg P eq.	1.18E-3	2.21E-5	4.28E-7	ND	ND	ND	ND	ND	ND	ND	1.16E-8	1.01E-6	0.00E+0	2.77E-7	0.00E+0
Eutrophication aquatic marine	EP-marine	kg N eq.	2.64E-3	1.63E-4	2.79E-6	ND	ND	ND	ND	ND	ND	ND	1.66E-6	7.43E-6	0.00E+0	9.65E-5	0.00E+0
Eutrophication terrestrial	EP-terrestrial	mol N eq.	2.79E-2	1.76E-3	2.64E-5	ND	ND	ND	ND	ND	ND	ND	1.82E-5	8.02E-5	0.00E+0	1.72E-4	0.00E+0
Photochemical ozone formation	POCP	kg NMVOC eq.	9.39E-3	1.13E-3	7.72E-6	ND	ND	ND	ND	ND	ND	ND	5.42E-6	5.14E-5	0.00E+0	7.00E-5	0.00E+0
Depletion of abiotic resources - minerals and metals	ADP-minerals&metals	kg Sb eq.	5.04E-5	1.06E-6	1.98E-9	ND	ND	ND	ND	ND	ND	ND	1.42E-10	4.83E-8	0.00E+0	7.76E-9	0.00E+0
Depletion of abiotic resources - fossil fuels	ADP-fossil	MJ, net calorific value	3.13E+1	3.81E-1	1.12E-3	ND	ND	ND	ND	ND	ND	ND	2.10E-4	1.74E-2	0.00E+0	5.90E-3	0.00E+0
Water use	WDP	m3 world eq. deprived	1.18E+0	2.58E-2	5.81E-4	ND	ND	ND	ND	ND	ND	ND	1.52E-5	1.18E-3	0.00E+0	-4.36E-4	0.00E+0
Acronyms																	
Disclaimers																	
General disclaimer	The results of the end-of-life stage (modules C1-C4) should be considered when using the results of the product stage (modules A1-A3/A1-A5 for services).																

INFORMATION RELATED TO EPDS OF MULTIPLE PRODUCTS

Justification for why this is representative	The representative product has been selected since it accounts for the majority of the total sales volume for the product group.

ABBREVIATIONS

EN	European Norm (Standard)
EF	Environmental Footprint
ISO	International Organization for Standardization
PCR	Product Category Rules
c-PCR	Complementary Product Category Rules
CAS No.	Chemical Abstracts Service Number
CEN	European Committee for Standardization
CLC	Co-location centre
CPC	Central product classification
GHS	Globally harmonized system of classification and labelling of chemicals
MJ	Megajoule
NMVOC	Non-Methane Volatile Organic Compounds
Sb eq.	Antimony Equivalents
P eq.	Phosphorus Equivalents
N eq.	Nitrogen Equivalents
CFC-11 eq.	Chlorofluorocarbon-11 Equivalents
CO_2 eq.	Carbon Dioxide Equivalents
kg C	Kilograms of Carbon
kg CO_2 eq.	Kilograms of Carbon Dioxide Equivalent
ND	Not Declared

REFERENCES

Ecoinvent (2023), Ecoinvent 3.10, available database in SimaPro version 9.4.0.2 Multi User, https://support.ecoinvent.org/ecoinvent-version-3.10 [Referenced: 2025-04-10]

EPD International (2025). General Programme Instructions for the International EPD® System.

Version 5.0.1. www.environdec.com.

EPD International (2025). PCR 2019:14 Construction products (EN 15804:A2). Version 2.0.1.

www.environdec.com.

SIS (2021). EN 15804:2012+A2:2019, "Sustainability of construction works - Environmental product declarations - Core rules for the product category of construction products". Svenska Institutet för Standarder

EN ISO 14025:2010 Environmental labels and declarations - Type III environmental declarations - Principles and procedures, Edited in 2010

EN ISO 14040:2006 Environmental management - Life cycle assessment - Principles and framework, 2006.

EN ISO 14044:2006 Environmental management - Life cycle assessment - Requirements and guidelines, 2006.

PRé Consultants, "SimaPro flow, Ecoinvent 3.9.1"http://www.pre-sustainability.com/simapro
Ecoinvent, 'Ecoinvent' <https://www.ecoinvent.org/database/database.html>

Tyréns (2024), Rapport, LCA-report EPD-generator – LK Systems, 2024-12-11. With Appendix PCR 2.0.1 (2025-05-06)

Tyréns (2025) Project tool report Tyréns EPD-generator 3.0.0 – LK Systems, 2025-10-03

VERSION HISTORY

Original Version of the EPD, 2026-07-08

PDF template version 1