Air/water/tank 6kw 11kw Split Heat Pump

User's Manual

AW6-IQC-IOU-V5

AW11-IQC-IOU-V5

Before operating this product, please read the this manual carefully and keep it for future reference.

Catalogue

Before use 1

1. List of accessories ---- 1
2. Safety precautions ---- 2
3. Main components ---- 5
4. Outlines and dimensions ---- 8
5. Working principles ---- 12
6. Specifications ---- 12
7. Exploded view ---- 14
8. Water pump ---- 20

Installation 21

1. Installation methods ---- 21
2. Installation of the indoor unit ---- 24
3. Installation of the outdoor unit ---- 25
4. Wiring ---- 27
5. Refrigerant pipe connection ---- 30
   Quick connector ---- 32
   Flare nut ---- 33
6. Water pipe connection ---- 35
7. Installation of the kits ---- 36
   T/P valve ---- 36
   Automatic exhaust valve ---- 37
   Water pressure gauge ---- 37
8. Water temperature sensor ---- 38
9. Air purging of water system ---- 39
10. Pre-Start up ---- 41

Use 42

1. Introduction of wired controller ---- 42
2. Operation on wired controller ---- 43
3. Error code ---- 48
4. Electric heating ---- 51

Catalogue

Service and maintenance 53

1. Attention ---- 53
2. Service ---- 54
   Indoor unit ---- 54
   6KW Outdoor unit ---- 54
   11KW Outdoor unit ---- 55
3. Maintenance ---- 57
   Cleaning of water filter ---- 57
   Cleaning of heat exchanger ---- 57
   Gas charging ---- 57
   Cleaning of plate exchanger ---- 58
   Antifreeze in winter ---- 58
4. Troubleshooting ---- 58

Wiring diagram 60

1 Before use

1. List of accessories

Attention

Thank you for choosing the product. In order to operate this product well and to prevent accidents due to misoperation, please read carefully this user manual before carrying out any installation or operation. Please pay special attention to the warning, prohibition and attention instructions. We will continuously upgrade this user manual for better service !

【List of accessories】

The accessories below are delivered together with the product .
Please check in time. If there is any shortage or damage, please contact local distributor.

【Indoor unit】

Name	Quantity	Remark
User Manual	1 piece	Instruction of installation and operation
Rubber Absorber	3 piece	To be installed under the bottom of the indoor unit, for absorbing the vibration of indoor unit
One Way Valve	1 piece	To be installed on city water inlet
T/P Valve	1 piece	To be installed to connector for T/P valve
Water Pressure Gauge	1 piece	To be installed to connector for water pressure gauge
Automatic Exhaust Valve	1 piece	To be installed to connector for automatic exhaust valve
Connector (3/4” to 1/2”)	1 piece	Connect to automatic exhaust valve

【Outdoor unit】

Name	Quantity	Remark
Installation Bracket	2 piece	For mounting outdoor unit to the wall
Rubber Absorber	4 piece	For absorbing the vibration of outdoor unit

【Symbol description】

The following symbols are very important. Please be sure to understand their meaning, which concerns the product and your personal safety.

Warning　　Caution　　Prohibition

【Safety precautions】

This appliance is not intended for use by persons, including children, with reduced physical, sensory or mental capabilities, or lack of experience and knowledge, unless they have been given supervision or instruction concerning use of the appliance by a person responsible for their safety. Children should be supervised to ensure that they do not play with the appliance.

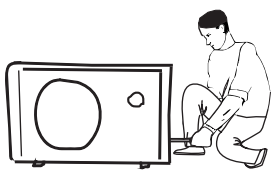

The installation, dismantlement and maintenance of the unit must be performed by qualified personnel. It is forbidden to do any changes to the structure of the unit. Otherwise injury of person or unit damage might happen.

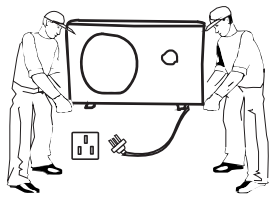

Make sure the power supply to the heat pump unit is off before any operations are done on the unit. When the power cord gets loose or is damaged, always get a qualified person to fix it.

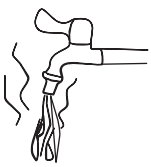

Before taking shower, please always add a mixture valve before water tap and set it to proper temperature.

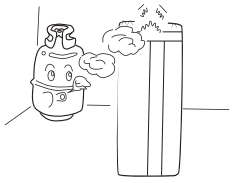

Keep the unit away from the combustible or corrosive environment.

Be sure to read this manual before use.

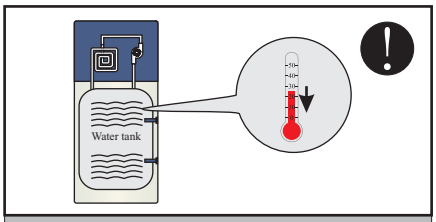

Don't run the heat pump unit with water temperature lower than 25℃.

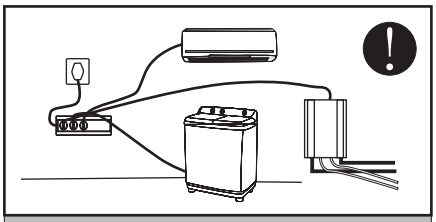

Use a dedicated socket for this unit,otherwise malfunction may occur.

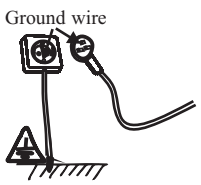

The power supply to the unit must be grounded.

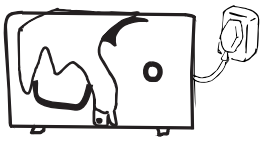

When running the unit, never cover the product with clothes, plastic cloth or any other material that block ventilation on the product, which will lead to low efficiency or even non-operation of this unit.

Do not touch the power plug with wet hands.Never pull out the pulg by pulling the power cable.

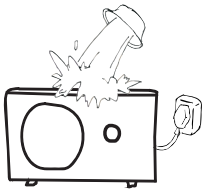

Water or any kind of liquid is strictly forbidden to be poured into the product, or may cause creepage or breakdown of the product.

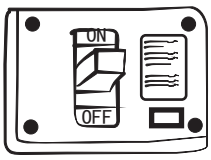

It is mandatory to use a suitable circuit breaker for the heat pump and make sure the power supply to the heater corresponds to the specifications. Otherwise the unit might be damaged.

Disposal of Scrap Batteries --- Please discard the batteries as sorted municipal waste at the accessible collection point.

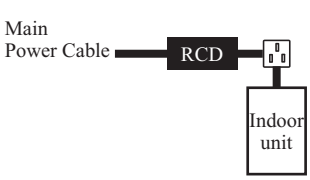

Installation of a residual current device (RCD) having a rated residual operating current not exceeding 30 mA is advisable.

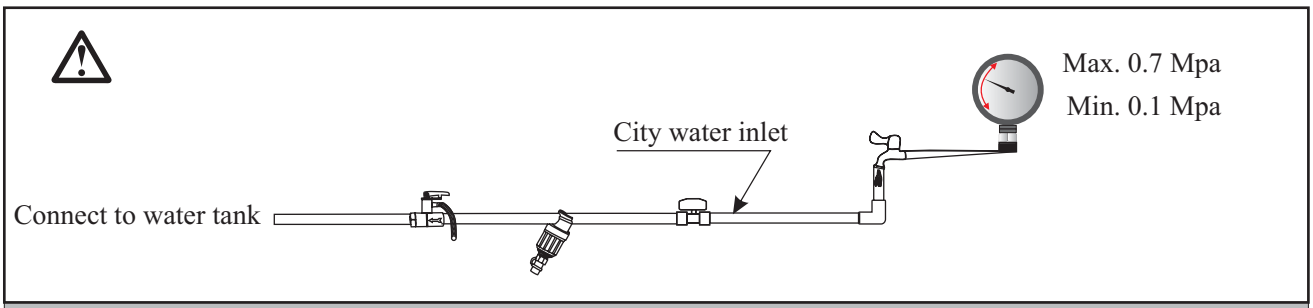

The maximum inlet water pressure, in pascals: 0.7Mpa.
The minimum inlet water pressure, in pascals, if this is necessary for the correct operation of the appliance: 0.1Mpa.

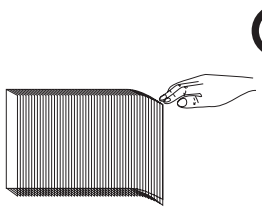

Be aware finger might be hurt by the fin of the coil.

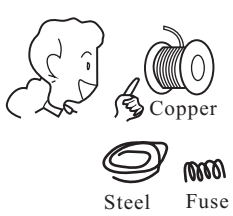

Please select the correct fuse or breaker as per recommended. Steel wire or copper wire cannot be taken as substitute for fuse or breaker. Otherwise, damaged maybe caused.

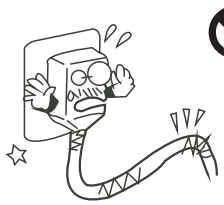

When the power cord gets loose or is damaged, always get a qualified person to fix it.

Do not touch the air outlet grill when fan motor is running.

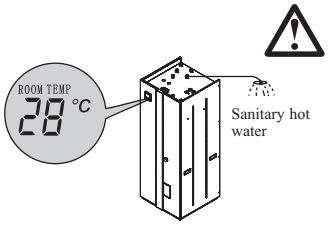

Please mind that when the unit works under room temperature control mode, it may not supply sanitary hot water with enough high temperature.

【6KW Indoor unit】

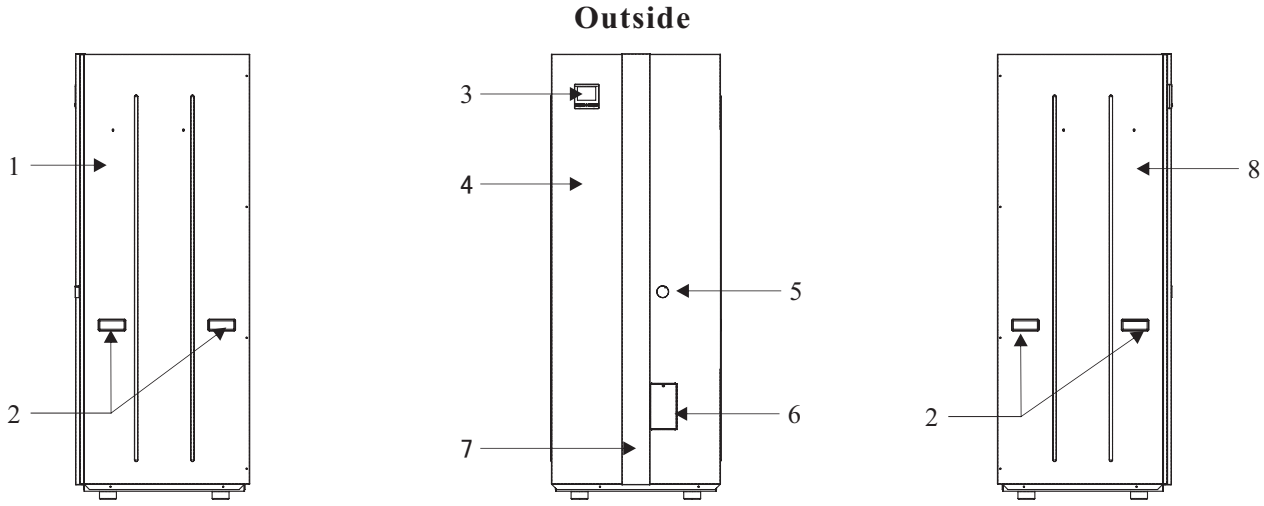

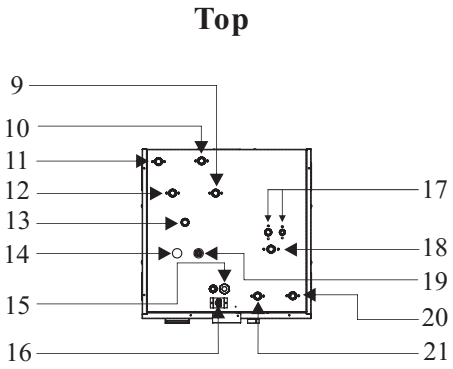

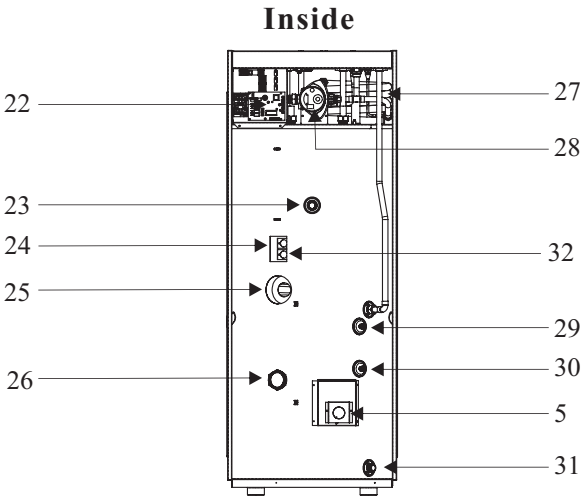

NO.	Name
1	Right panel
2	Handle
3	Wired controller
4	Front panel
5	Thermostat 1
6	Small front panel
7	Decorative panel
8	Left panel
9	High temperature shower water outlet
10	Filling of tank/heating system
11	Shower coil water inlet
12	Water inlet from floor heating/radiator
13	Middle temperature shower water outlet
14	Manometer
15	Power supply
16	Quick connector for power cable to outdoor unit
17	Quick connector for piping kit

NO.	Name
18	Automatic exhaust valve
19	T/P valve
20	Water outlet to radiator
21	Water outlet to floor heating
22	P.C.B
23	Anode rod
24	Overheating protector for 1.7KW electric heater
25	1.7KW electric heater 230V/50Hz/1PH
26	6KW electric heater 400V/50Hz/3Ph(can be 230V/50Hz/1ph by change the wiring)
27	Heat exchanger
28	Water pump
29	Temperature sensor 2
30	Temperature sensor 1
31	Drainage
32	Overheating protector for 6KW electric heater

【11KW Indoor unit】

Outside

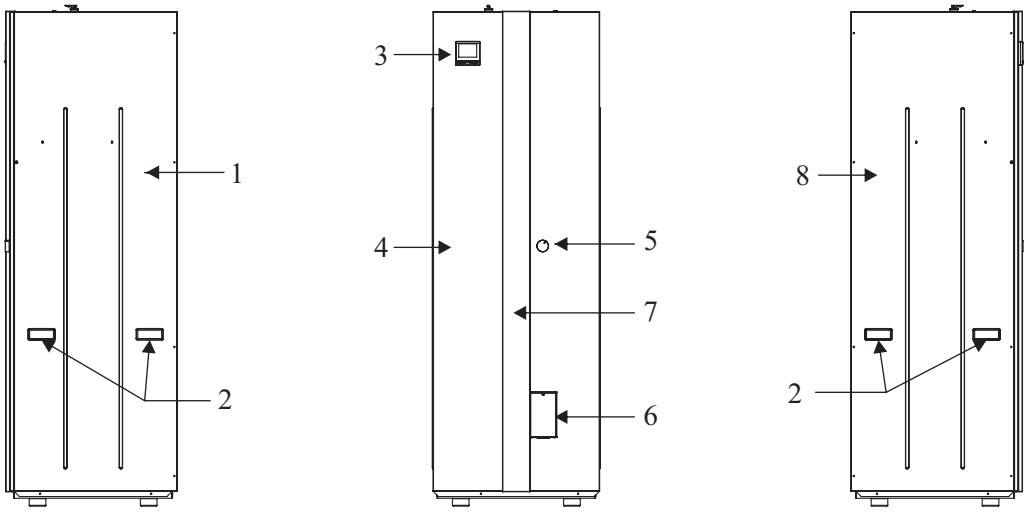

Top

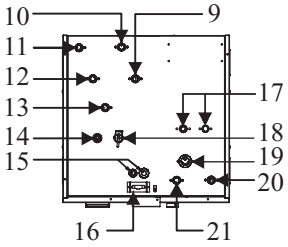

Inside

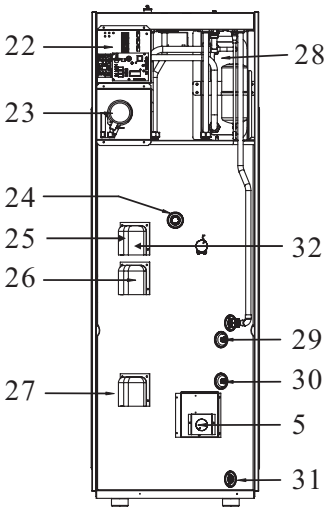

NO.	Name
1	Right panel
2	Handle
3	Wired controller
4	Front panel
5	Thermostat 1
6	Small front panel
7	Decorative panel
8	Left panel
9	High temperature shower water outlet
10	Filling of tank/heating system
11	Shower coil water inlet
12	Water inlet from floor heating/radiator
13	Middle temperature shower water outlet
14	Manometer
15	Power supply
16	Quick connector for power cable to outdoor unit
17	Quick connector for piping kit

NO.	Name
18	T/P valve
19	Automatic exhaust valve
20	Water outlet to radiator
21	Water outlet to floor heating
22	P.C.B
23	Water pump
24	Anode rod
25	Overheating protector for 1.7KW electric heater
26	1.7KW electric heater 230V/50Hz/1PH
27	6KW electric heater 400V/50Hz/3Ph(can be 230V/50Hz/1ph by change the wiring)
28	Plate heat exchanger
29	Temperature sensor 2
30	Temperature sensor 1
31	Drainage
32	Overheating protector for 6KW electric heater

【6KW Outdoor unit 】

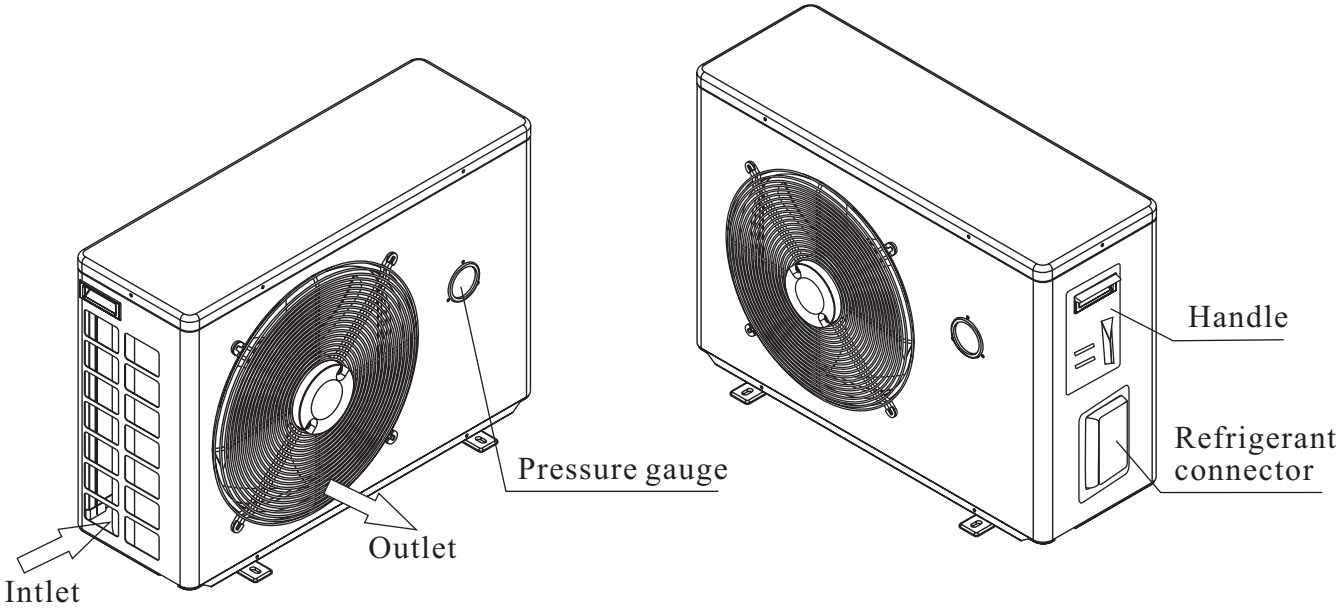

【11KW Outdoor unit 】

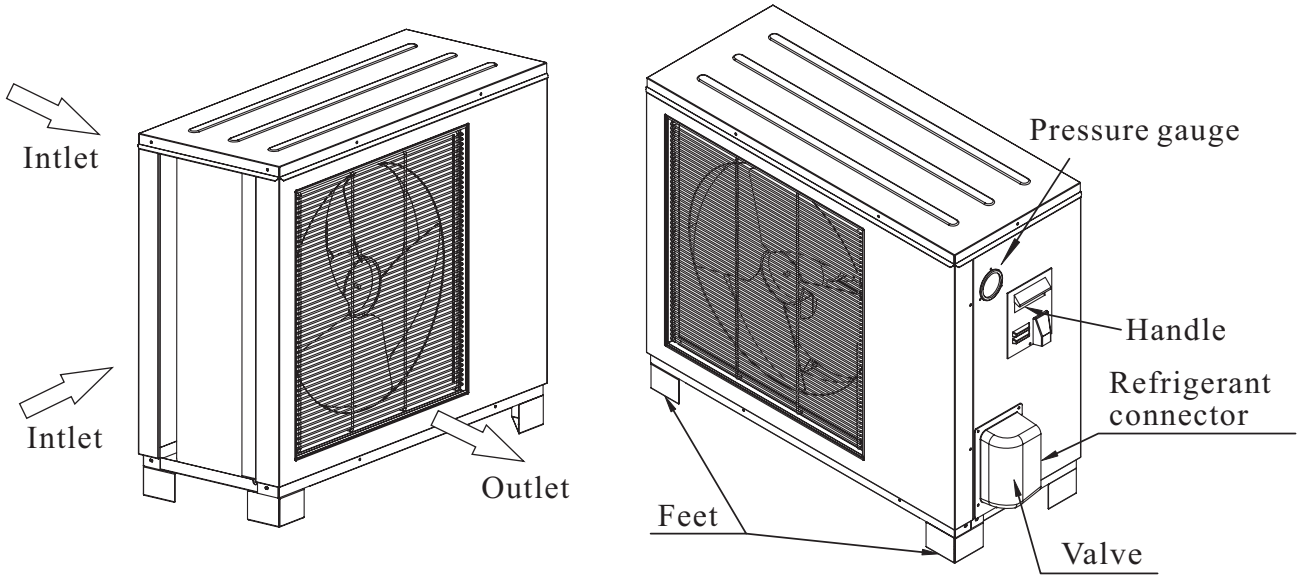

【6KW Indoor unit】

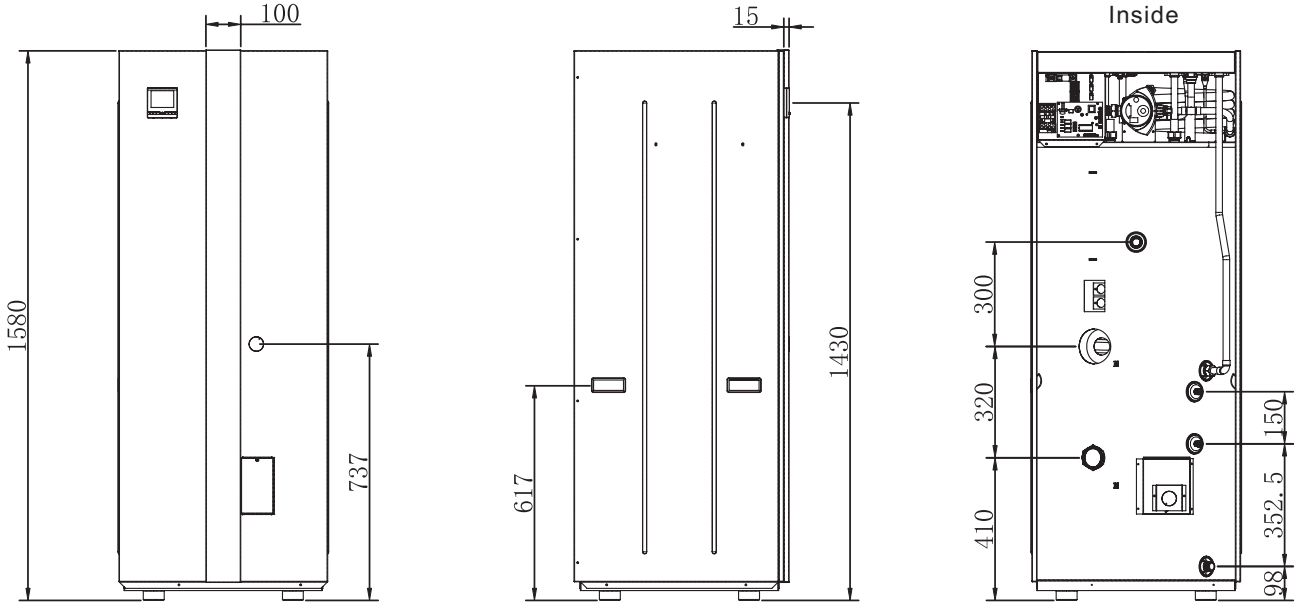

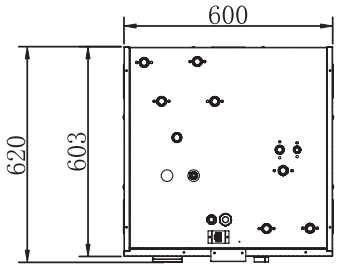

Unit:mm

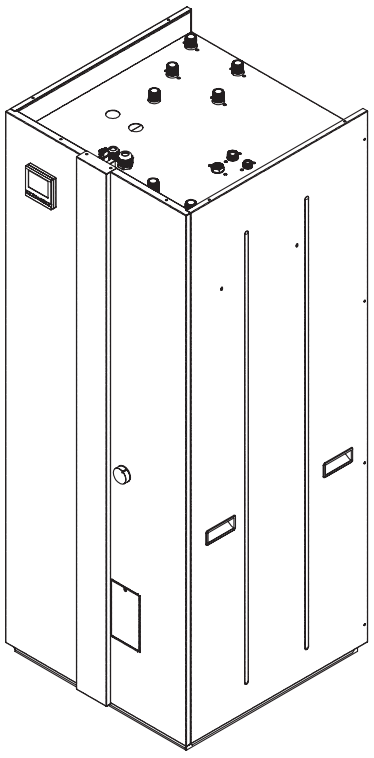

【11KW Indoor unit】

Unit:mm

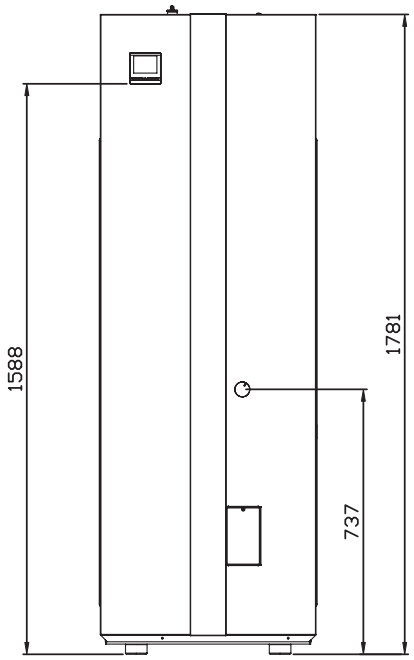

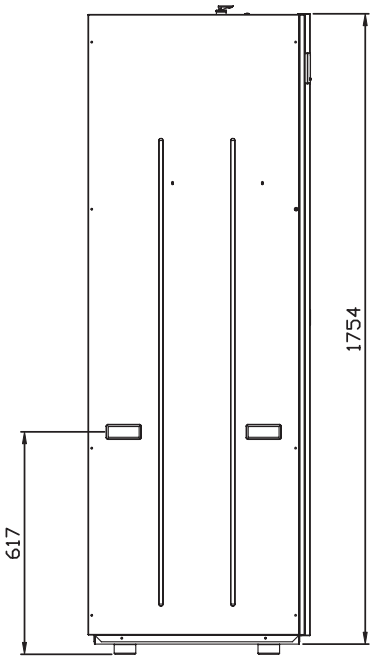

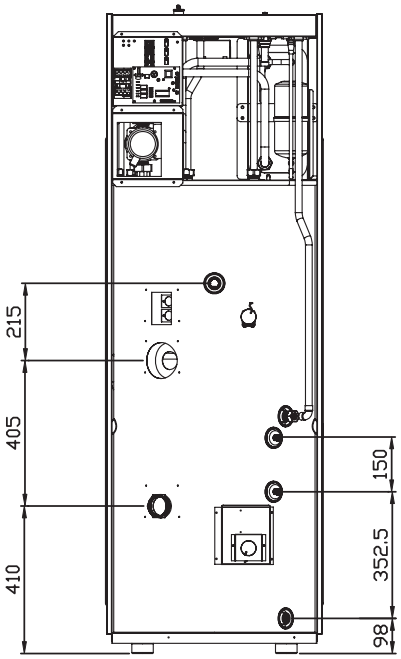

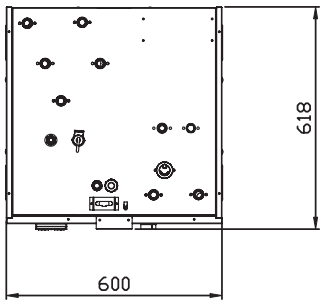

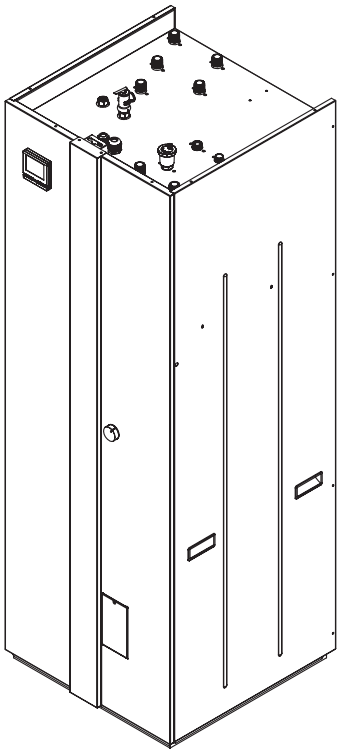

【6KW Outdoor unit】

Unit:mm

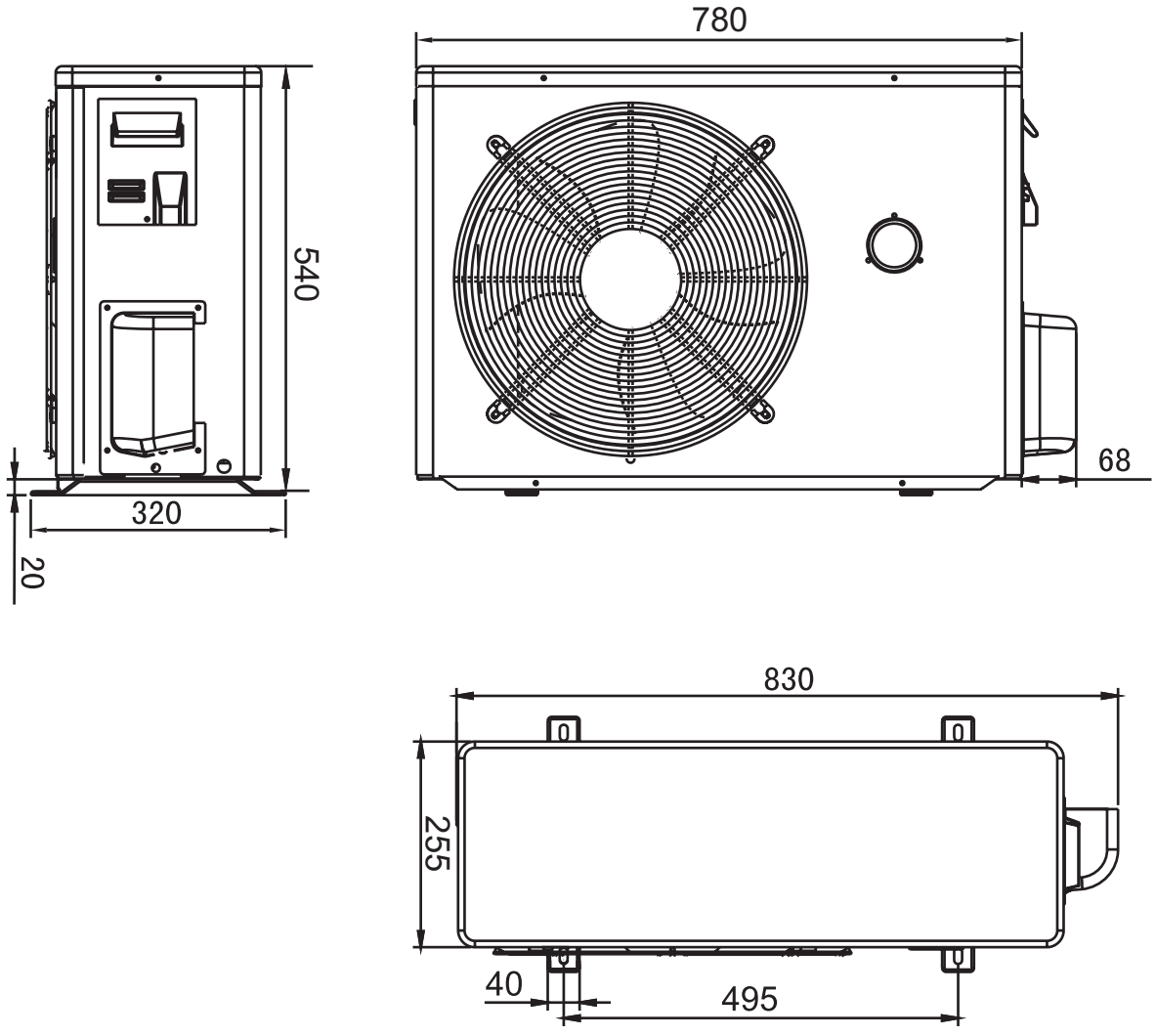

Liquid pipe O.D. ϕ 6.35(1/4")

Gas pipe O.D. ϕ 12.7(1/2")

【11KW Outdoor unit】

Unit:mm

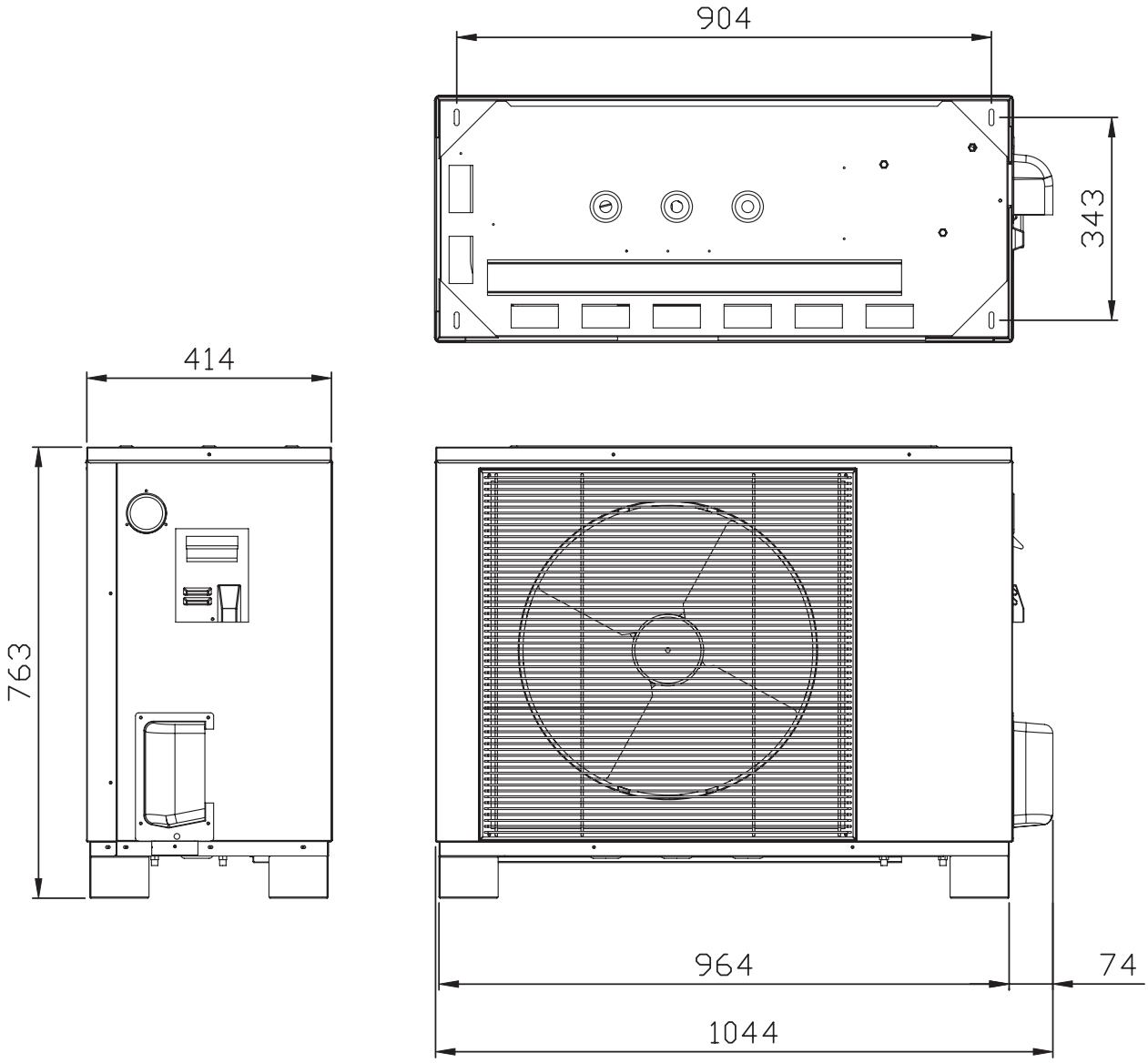

Liquid pipe O.D. ϕ9.52(3/8")

Gas pipe O.D. ϕ12.7(1/2")

5. Working principles

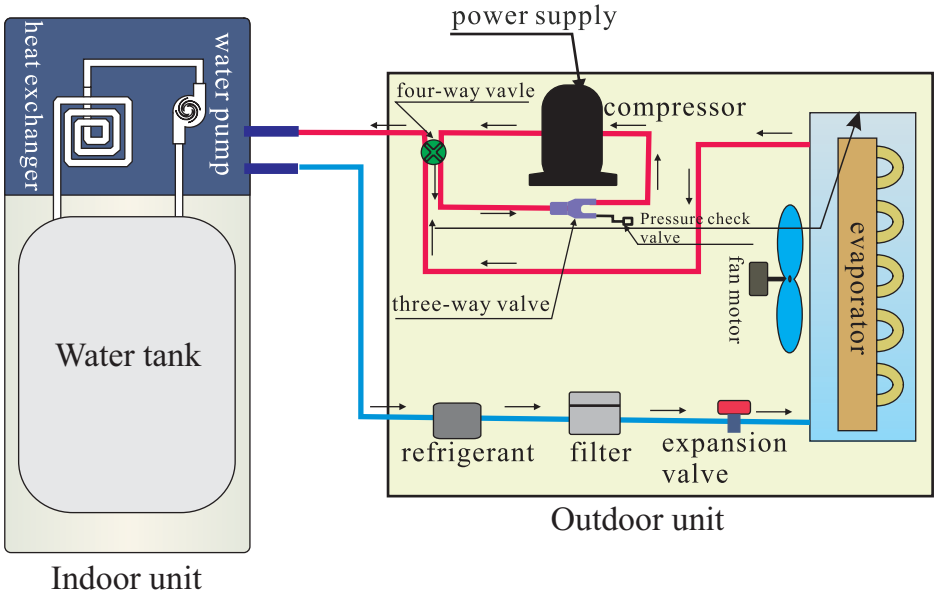

6. Specifications

Indoor unit				
Model number			AWH 6-IIU-V5	AWH11-IIU-V5
Power supply			230V/50Hz/1PH	380-400V/50Hz/3PH
1.7KW Electric Heater			230V/50Hz/1PH	230V/50Hz/1PH
6KW Electric Heater			400V/50Hz/3PH or 230V/50Hz/3PH	400V/50Hz/3PH or 230V/50Hz/3PH
Water side Heat Exchanger	Type		Tube-in-tube heat exchanger	Plate heat exchanger
	Water pressure drop	Kpa	30	30
	Piping connection	Inch	G3/4”	G1
	Water head	M	6	6
	Rated water flow	m^3/h	1.0	3.0
Max. Water Temp.		℃	75	75
Tank Volume		L	200L	200L
Refrigerant	Indoor unit		R410A	R410A
	Piping kits		R410A	R410A
Net dimension		mm	600×600×1580	615×600×1780
Packing dimension		mm	655×640×1730	655×655×2080
Net weight		Kg	120	130
Gross weight		Kg	135	145

6. Specifications

Outdoor unit				
Model number			AWH 6-IOU-V5	AWH 11-IOU-V5
Power supply			230V/50HZ/1PH	380-400V/50HZ/3PH
Refrigerant volume			R410A	R410A
Heating capacity		Btu/h	7165-20472	15582-39238
		W	2100-6000	4567-11500
Input power (Heating)		W	500-1500	915-3028
Input crrrent (Heating)		A	2.2-6.5	4.0-13.17
C.O.P		W/W	3.3-4.2	3.8-5.1
Compressor	Type		Inverter rotary	Twin rotary
	Quantity	Pcs	1	1
Fan	Type		Axial	Axial
	Quantity	Pcs	1	1
	Airflow	M^3/h	1750	3200
	Input power	W	85	160
Air side Heat Exchanger	Type		Tube-Fin	Tube-Fin
	Face area	M^2	0.395	0.871
	in/Fins-Row		2 Rows-14	2 Rows-14
	Tube Diameter	Inch	3/8”	3/8”
Noise		DB(A)	46	55
Net dimension		mm	780×255×590	1044×414×763
Packing dimension		mm	920×340×600	1140×480×805
Net weight		Kg	33	70
Gross weight		Kg	36	72.5

Technical specification		
Ambient temperature range in heating		-25-45℃
Outlet water temperature range in heating		25-52℃
Max refrigerant pipe length (single return)		10m
Max height difference between indoor and outdoor unit		5m
Refrigerant pipe dimension	AW 6-IOU-V5	Liquid pipe OD12.7(1/2”),Gas pipe OD pipe 6.35(1/4”)
	AW 11-IOU-V5	Liquid pipe OD12.7(1/2”),Gas pipe OD pipe 9.52(3/8”)

Installation advice	
Max allowable water pressure	0.7 Mpa
Max setting temperature	52℃
Max outlet water temperature at ambient temperature -15℃	52℃

Note:

Heating condition: Water in/out temperature: 30℃/35℃, ambient temperature: DB/WB 7/6℃.

The specifications are subject to change without prior notice.

For actual specifications of the unit, please refer to the specification stickers on the unit.

【6KW Indoor unit】

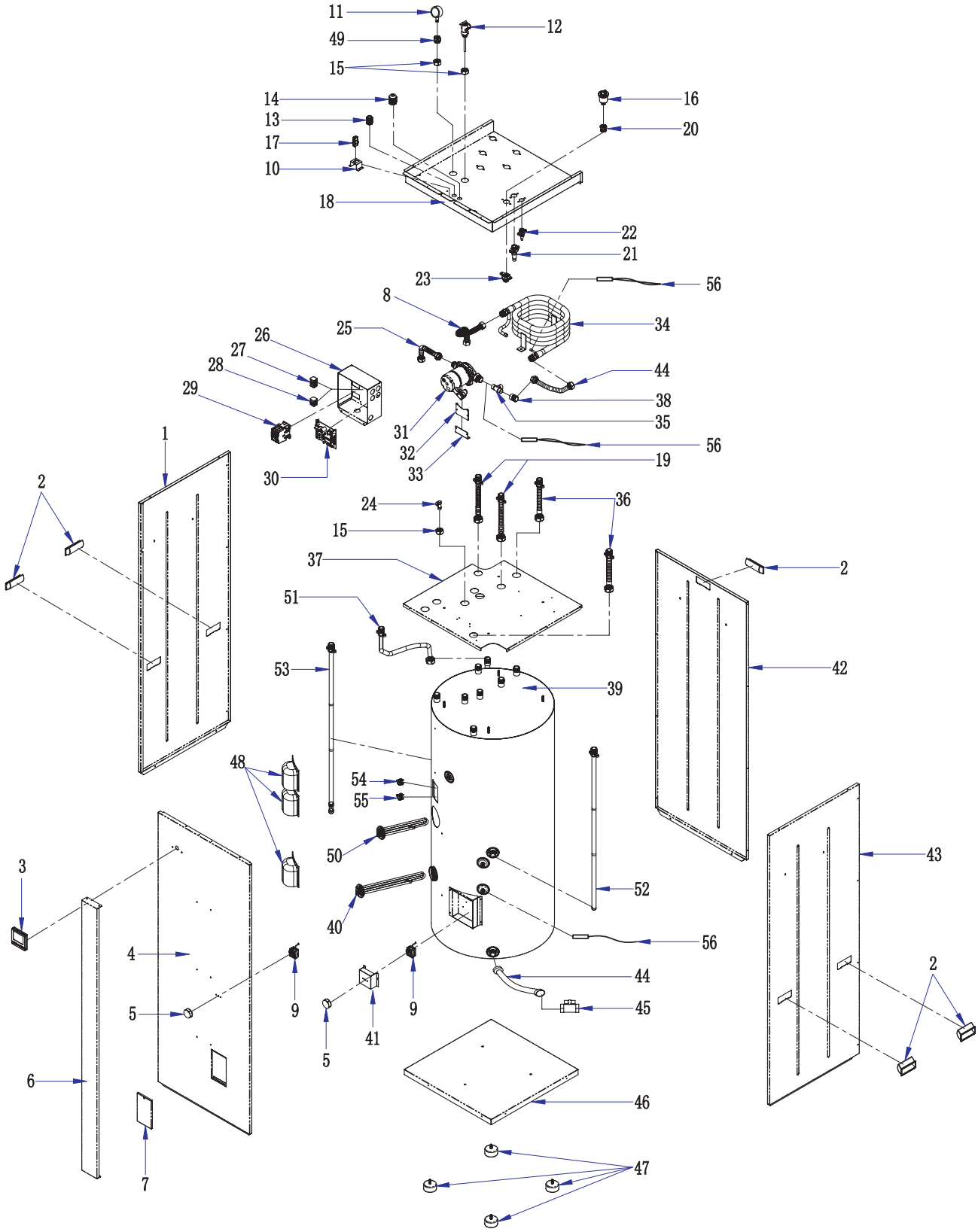

7. Exploded view

No.	Name	Quantity
1	Left panel	1
2	Handle	5
3	Wired controller panel	1
	Wired controller box	1
4	Front panel	1
5	Thermostat knob	2
6	Decorative panel	1
7	Small front panel	1
8	Stainless steel coil 1	1
9	Thermostat	2
10	Bracket of rubber base	1
11	Water pressure gauge	1
12	T/P valve	1
13	Cable gland PG16	1
14	Cable gland Pg21	1
15	G1/2″ female connector	3
16	Automatic exhaust valve	1
17	Rubber base	1
18	Top panel	1
19	Stainless steel coil 2	2
20	Connector adaptor 1	1
21	1/2″gas valve	1
22	1/4″liquid valve	1
23	Connector adaptor 2	1
24	T type three way valve 2	1
25	Stainless steel coil 3	1
26	Electrical box	1
27	4 bit terminal block	1
28	3 bit terminal block	1
29	AC contactor	1

No.	Name	Quantity
30	Controller	1
31	Water pump	1
32	Water pump bracket 1	1
33	Water pump bracket 2	1
34	Tube in tube heat exchanger	1
35	T type three way valve	1
36	Stainless steel coil 4	2
37	Middle plate	1
38	Connector adaptor	1
39	Water tank	1
40	Electric heater	1
41	Thermostat bracket	1
42	Back panel	1
43	Right panel	1
44	Stainless steel coil 2	2
45	Ball Valves	1
46	Bottom plate	1
47	Rubber feet	4
48	Plastic cover	3
49	Connector adaptor for water pressure gauge	1
50	Electric heater	1
51	Stainless steel coil 5	1
52	Stainless steel coil 6	1
53	Stainless steel coil 7	1
54	Overheating protector for 1.7KW electric heater	1
55	Overheating protector for 6KW electric heater	1
56	Sensor	3

【6KW Outdoor unit】

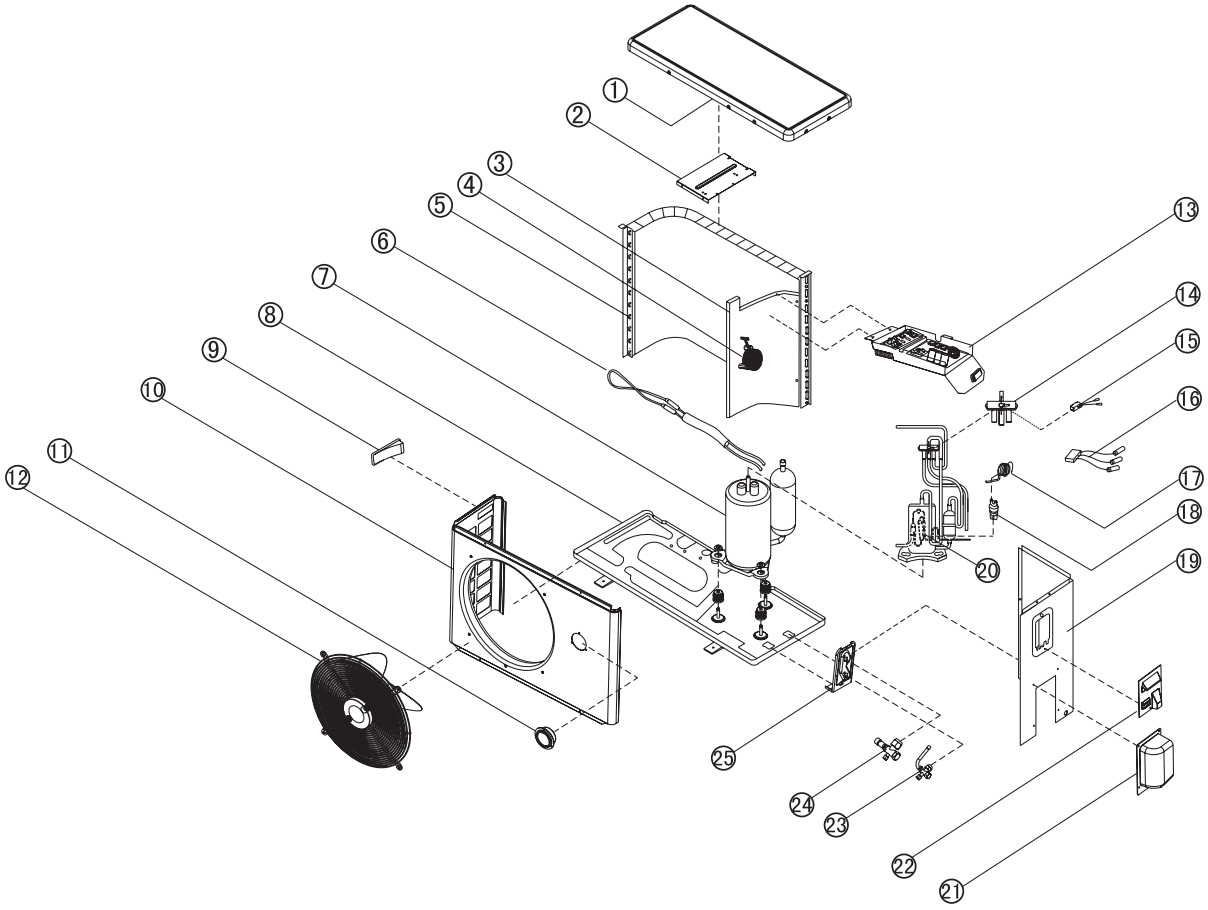

NO	Name	NO	Name
1	Top panel	14	Four-way valve
2	Control box connect panel	15	Four-way valve coil
3	Bulkhead	16	Sensor
4	PFC transducer	17	Capillary
5	Condenser	18	Filter
6	Condenser Heater	19	Right plate
7	Compressor	20	One way valve
8	Bottom plate	21	Valve
9	Handle	22	Big Handle
10	Front panel	23	Gas Connector
11	Pressure	24	Liquid Connector
12	Axial Fan With External Rotor	25	Valve plate
13	Control system		

【11KW Indoor unit】

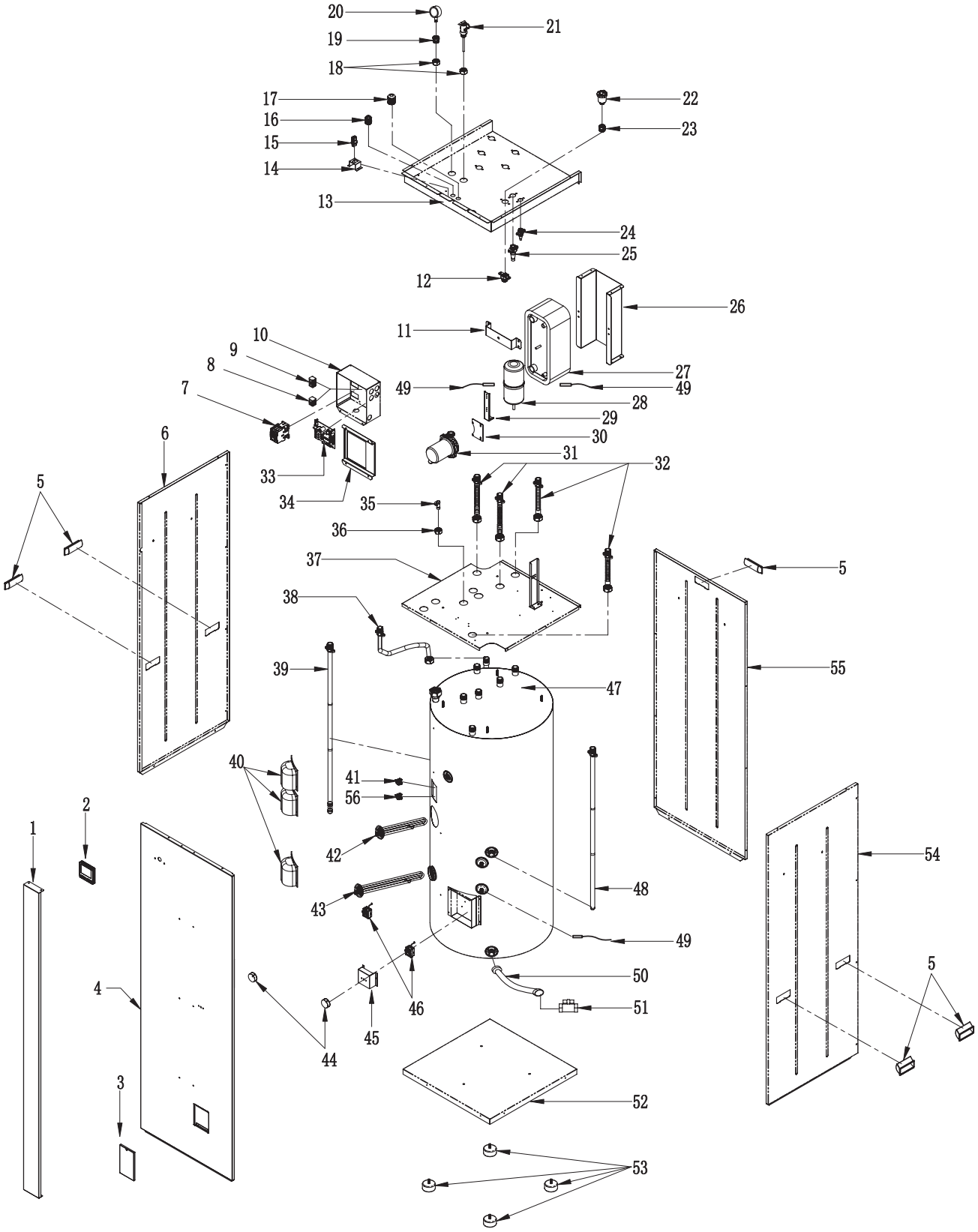

7. Exploded view

No.	Name	Quantity
1	Decorative panel	1
2	Wired controller	1
3	Small front panel	1
4	Front panel	1
5	Handle	5
6	Left panel	1
7	AC contactor	1
8	4 bit terminal block	1
9	3 bit terminal block	1
10	Electrical box	1
11	Bracket for plate heat exchanger 2	1
12	Connector adaptor 2	1
13	Top panel	1
14	Bracket of rubber base	1
15	Rubber base	1
16	Cable gland Pg16	1
17	Cable gland Pg21	1
18	G1/2" female connector	2
19	Connector adaptor 1	1
20	Water pressure gauge	1
21	T/P valve	1
22	Automatic exhaust valve	1
23	Connector adaptor 2	1
24	G3/8″liquid valve	1
25	G1/2″gas valve	1
26	Bracket for plate heat exchanger 1	1
27	Plate heat exchanger	1
28	Refrigerant expansion tank	1
29	Water pump bracket 2	1
30	Water pump bracket 1	1

No.	Name	Quantity
31	Water pump	1
32	Stainless steel coil 1	4
33	Controller	1
34	Bracket for electric box	1
35	T type three way valve	1
36	Copper nut	1
37	Middle plate	1
38	Stainless steel coil 2	1
39	Stainless steel coil 3	1
40	Plastic cover	3
41	Overheating protector for 1.7KW electric heater	1
42	Electric heater	1
43	Electric heater	1
44	Thermostat knob	2
45	Thermostat bracket	1
46	Thermostat	2
47	Water tank	1
48	Stainless steel coil 4	1
49	Sensor	3
50	Stainless steel coil 5	1
51	Ball Valves	1
52	Bottom plate	1
53	Rubber feet	4
54	Right panel	1
55	Back panel	1
56	Overheating protector for 6KW electric heater	1

【11KW Outdoor unit】

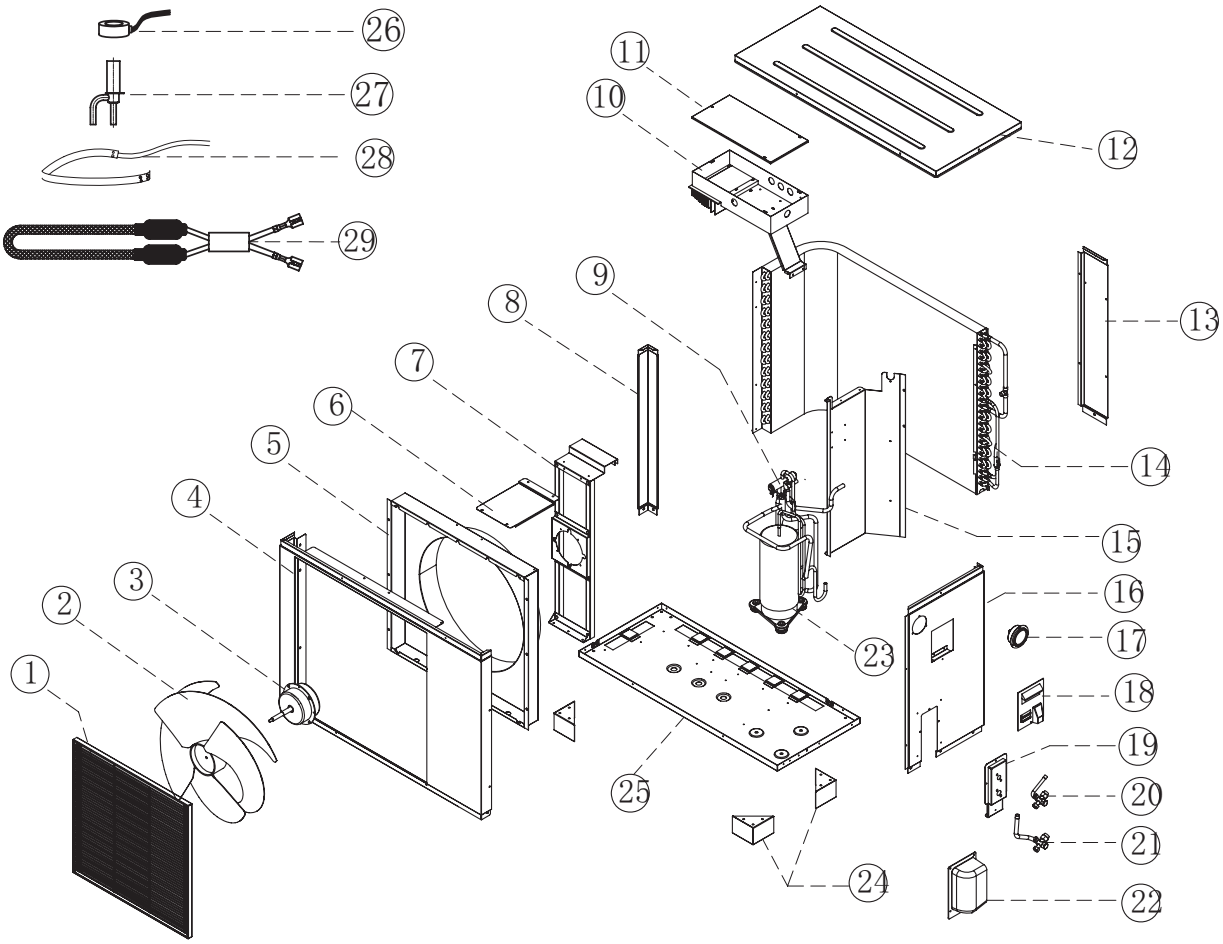

NO	Name	NO	Name
1	Decorative Panel	16	Right Plate
2	Outdoor Fan	17	Pressure
3	Outdoor Motor	18	Big Handle
4	Front Panel	19	Bulkhead
5	Air guide	20	3/8 Valve
6	Fixture	21	1/2 Valve
7	Motor Bracket	22	Valve Cover
8	Column support	23	Compressor
9	Four-Way Valve	24	Feet
10	Electrical Box	25	Bottom Plate
11	Electric Box Cover	26	EEV Coil
12	Top Panel	27	Electrical Expansion Valve
13	Back Panel	28	Compressor Heater
14	Condenser	29	Condebser Heater
15	Bulkhead		

【Temperature range】

Ambient temperature: 0℃ to 40℃
Media temperature: +2℃ to 95℃

【Wiring】

Danger! Risk of electrocution.

- Have all electrical work carried out by qualified electricians only.
- Disconnect the electrical circuit and lock it to prevent accidental start-up.
- Check to make sure the power is turned off.

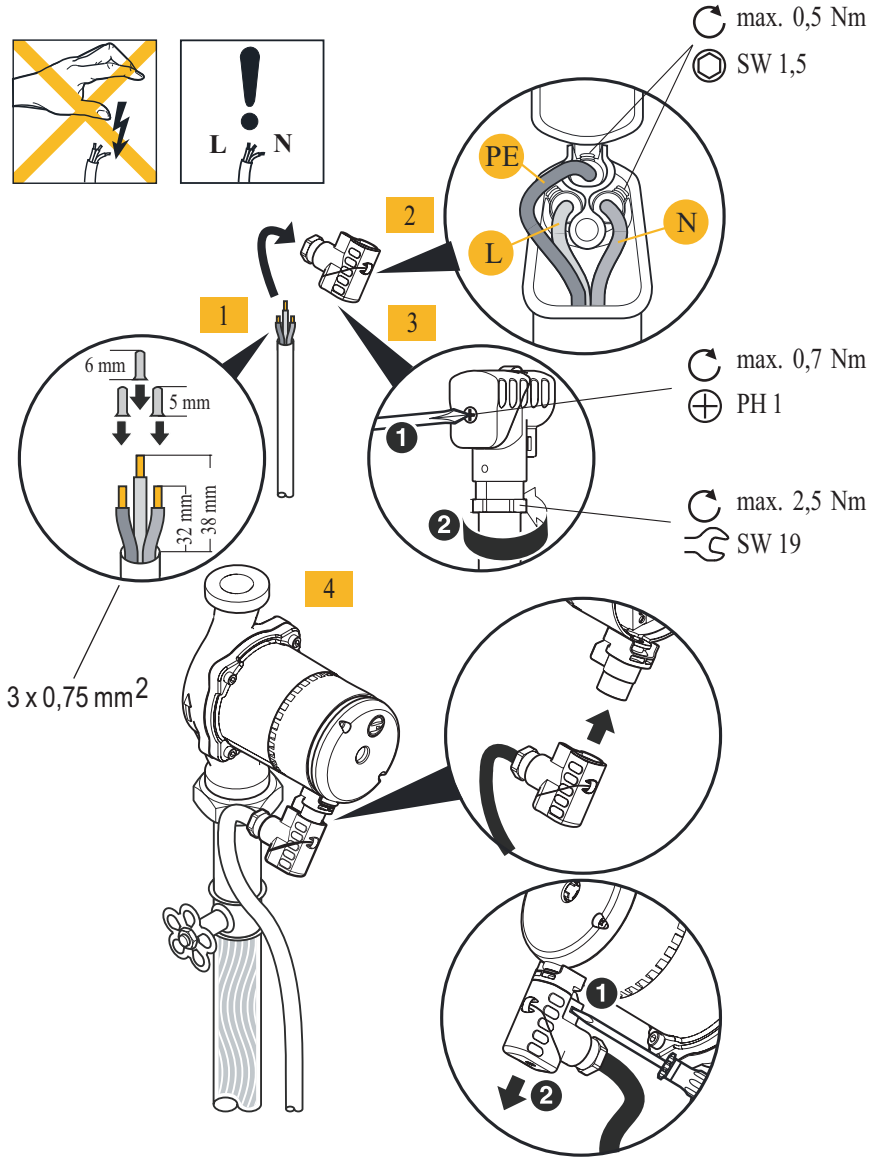

2 Installation

1. Installation methods

⚠ The installation of the product should be handled by professional installer or under their instructions.

【Tools】

The tools needed for installation: spirit level, pencil, crosshead screwdriver, drill 8mm. concrete drill bit, detection drill, square, tape measure or ruler, tape width 65 mm, hole saw about 80mm (deviation in size may occur), knife and two adjustable spanners or pliers (and possibly torque wrench).

【Installation methods】

Sanitary hot water, floor heating hot water and radiator heating hot water can all be get from the indoor unit. With its inbuilt 1.7kW and 6kW electric heater, it ensures its heating capacity in cold days and guarantees enough high temperature sanitary hot water.

By using a mixture water to mix high temperature sanitary hot water and medium temperature sanitary hot water together, it ensures the ideal temperature of sanitary hot water, as well as increases the amount of sanitary hot water.

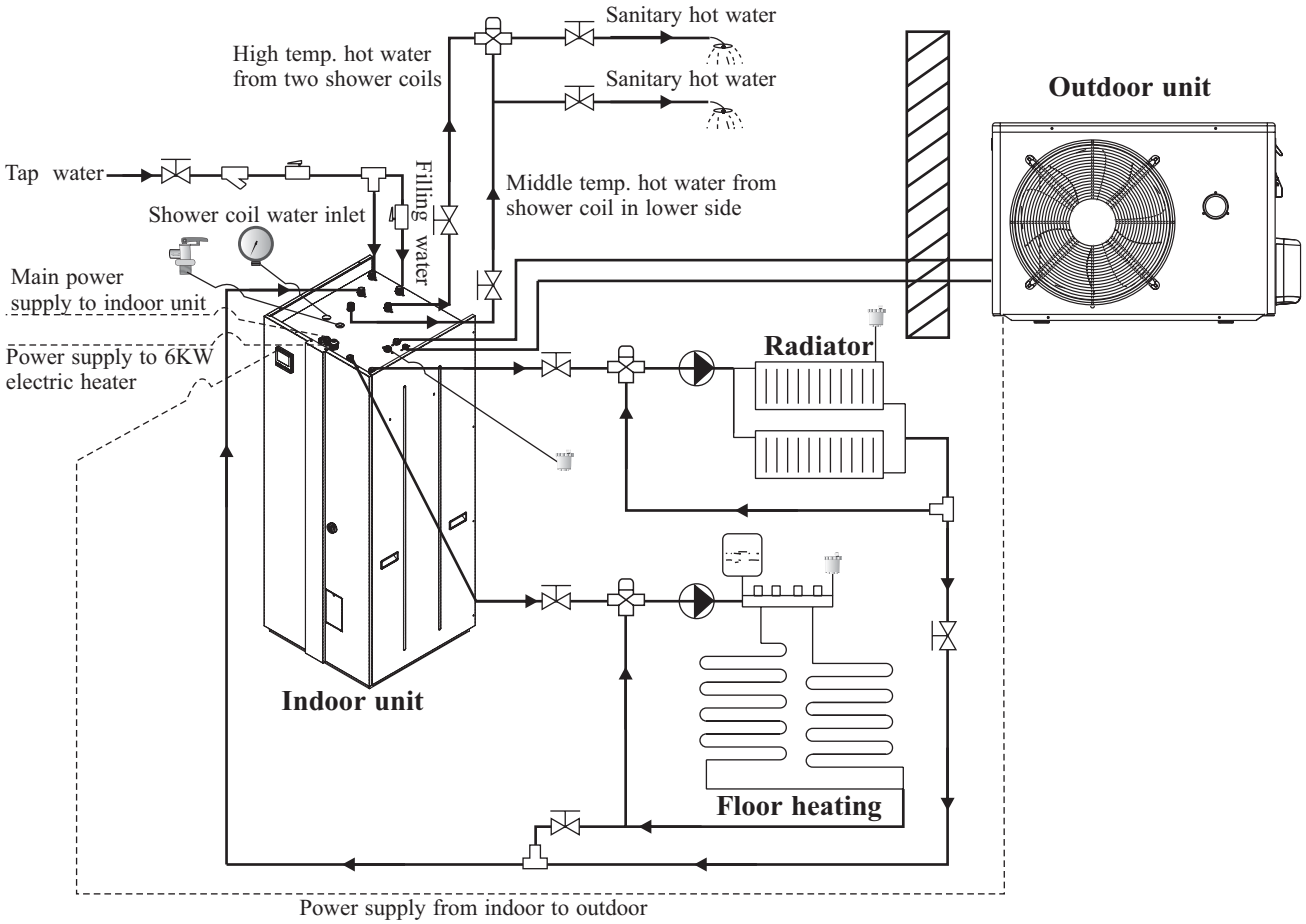

Symbol	Name
	Mixture valve
	Water pump
	Filter
	T/P Valve
	One way valve
	Automatic Exhaust Valve
	Water Pressure Gauge
	Shutoff valve
	Three-way vlave

If bivalent valve is needed for radiator system, please connect it to the system as shown below:

1. With bivalent valve and radiator system only

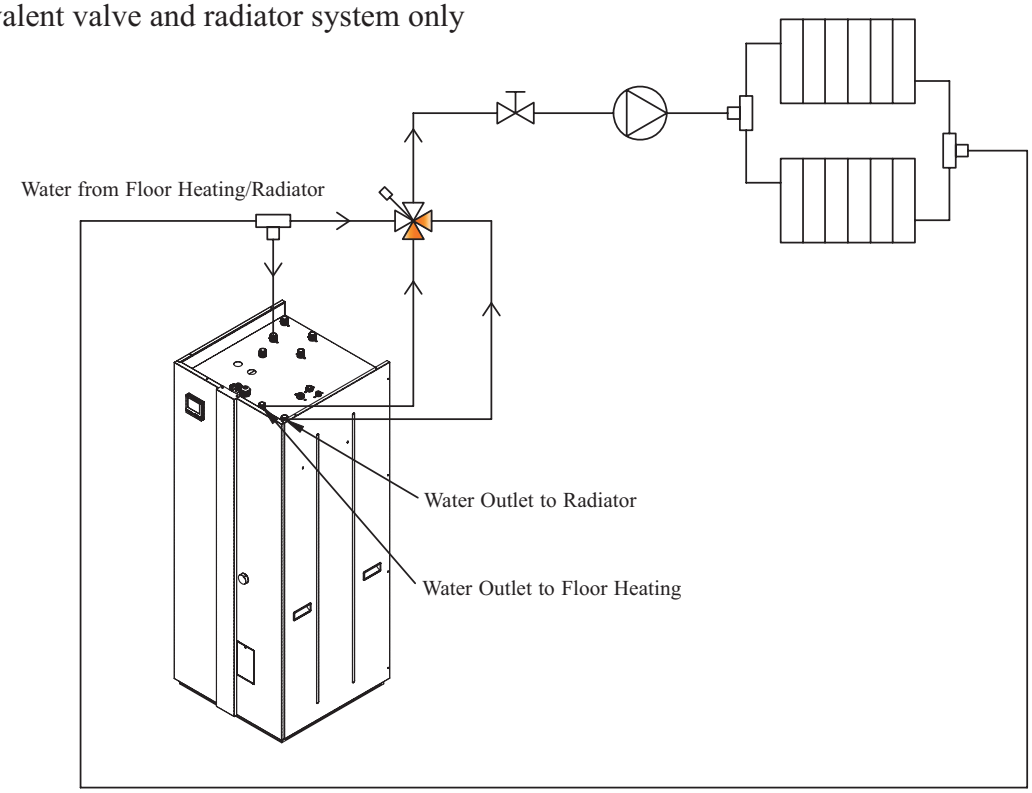

2. With bivalent valve, radiator system and also floor heating system

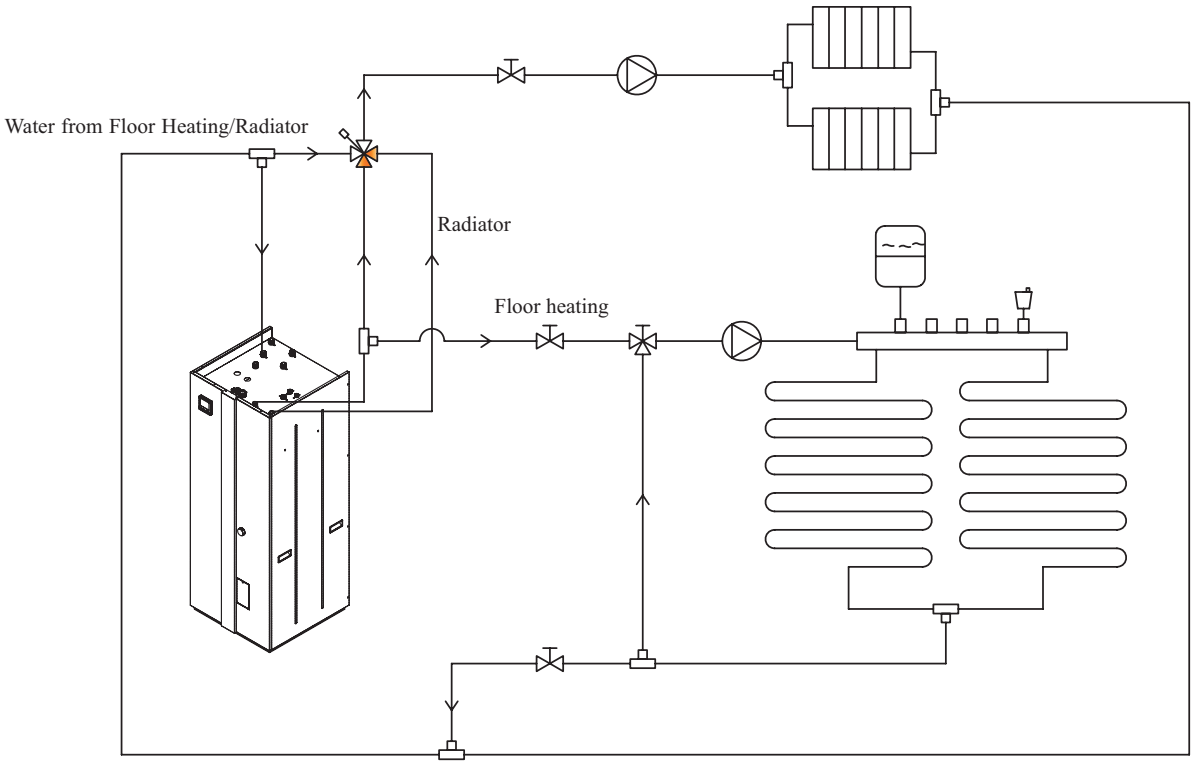

【Installation notes】

A. The indoor unit can be located in a room, corridor, balcony, garage or warehouse.

B. Indoor unit should be placed on flat and solid ground.

C. The unit is recommended to be put in a space close to water supply, and drainage.

D. The outdoor and indoor unit should be placed close, to save the copper tube as well as the energy.

E. The indoor unit shall be placed in dry and well-ventilated environment.

F. Indoor unit mustn't be installed in an environment where volatile, corrosive or flammable liquid or gas exists.

G. During the movement, please be careful to keep the unit vertically. If the unit is tilted by 30°, it may fall down and cause damage to itself or the porter.

H. Don't expose the operation panel under direct sunshine.

I. Enough space should be left around the indoor unit for futher maintenance.

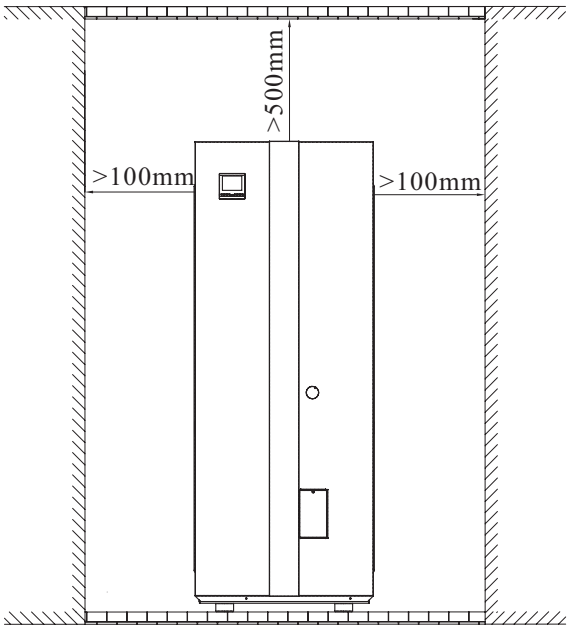

【Installation notes】

A. The outdoor unit can be located in a room, corridor, balcony, and roof or hanged on the wall.

B. Please don't install outdoor unit close to bedroom or living room, because there is some noise when it's running.

C. The outdoor unit shall be placed in dry and well-ventilated environment.

D. Outdoor unit mustn't be installed in an environment where volatile, corrosive or flammable liquid or gas exists.

E. Please cover a protecting roof over the outdoor unit, lest ice or snow blocks the air inlet. Shield the unit from direct sunshine, rain or snow, but never cover the unit which will cause the bad ventilation.

F. Please ensure there is drainage system around the location, to drain the condensated water under defrosting mode.

G. Please don't install the indoor and outdoor unit in damp locations, otherwise it may cause short-circuit or corrosion of some components. The unit should be free from corrosive and moisture surrounding. Otherwise the lifetime of the unit might be shortened.

J. When installing the unit in harsh climatic conditions, sub-zero temperatures, snow, humidity area, please raise the unit above the ground by about 20cm.

I. When installing the unit, tilt it by 1cm/cm to left side of the unit (see from front), for better water drainage.

J. Outdoor unit should be placed on flat and solid ground. When installing the outdoor unit, please ensure enough space around the outdoor unit, for better ventilation and maintenance. Please refer to the illustration below.

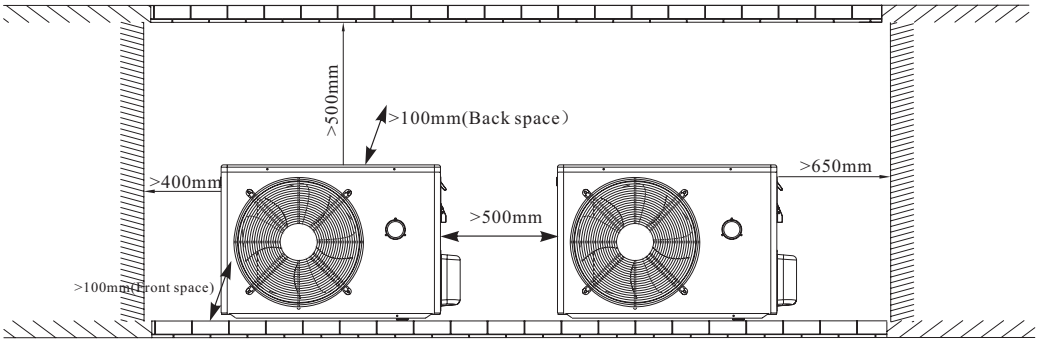

【Installation】

Please add rubber absorber under the outdoor unit, to reduce the vibration.

【A. On a concrete stand】

1.The unit must be located on a flat,solid,preferably cemented surface.

2.When installing the unit,introduce a tilt of 1cm/m for rain water evacuation.

3.When installing the unit in harsh climatic conditions,sub-zero temperature ,snow,humidity.., it is recommended to raise the unit off the ground by about 50cm.

4.It is recommended to have a base with following size for these units:

5.Rubber vibration absorbing mountings are recommended.

6.When sitting he unit,take care to leave sufficient free space all around it for carrying out maintenance.

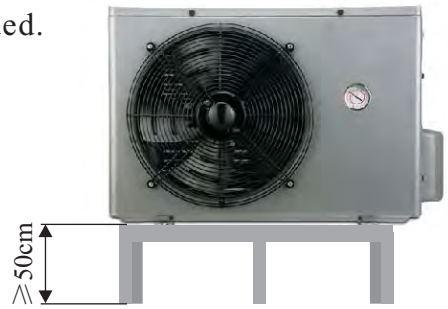

【B. On brackets on the wall】

1. Fix the bracket on the wall with expansion bolts.

2. Place the outdoor unit on the bracket. A rubber absorber is recommended to reduce the noise of the outdoor unit.

3. Fix the unit to the bracket.

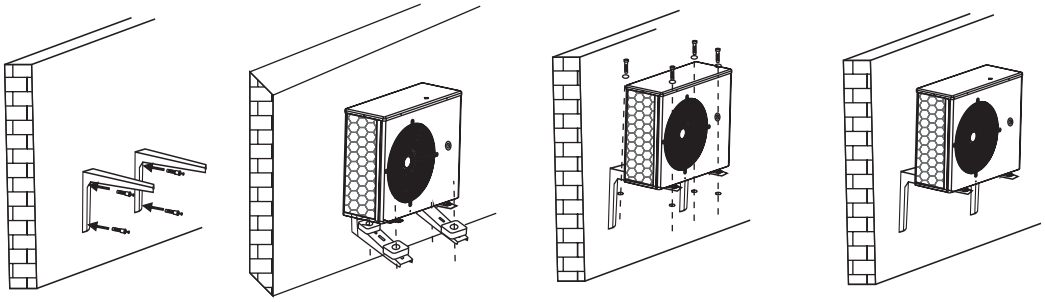

The refrigerant piping and signal cable between indoor and outdoor unit should go through the wall by using a wall sleeve.

The hole should lean to outside a little bit(≥8 degrees), to avoid rain water or condensate water flow back to the indoor.

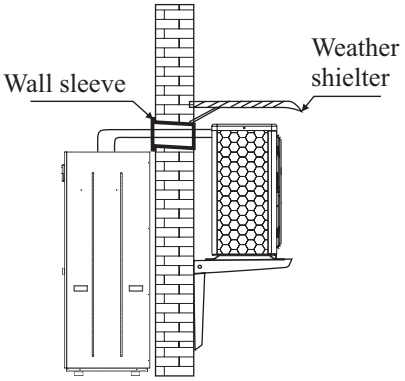

【Precaution:】

1. The appliance shall be installed in accordance with national wiring regulations.
2. It is recommended to use a suitable circuit breaker for the heat pump and make sure the power supply to the unit corresponds to the specifications. Otherwise the unit might be damaged.
3. The power supply to the heat pump unit must be grounded.
4. Cable should be fixed tightly, to ensure it won't get loose.

【For the installation of the Power cable between indoor and outdoor unit】

Please connect the wiring between indoor and outdoor unit, by connecting the quick couples together.

Cable with quick couples is packed together with the piping kit.

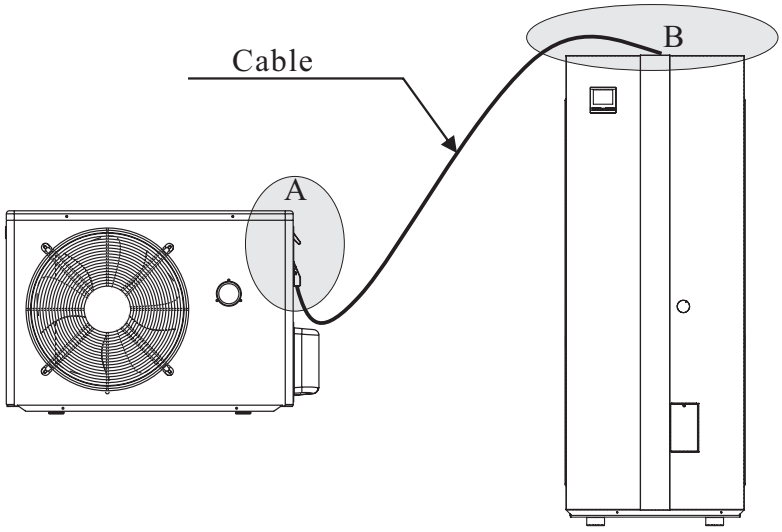

A

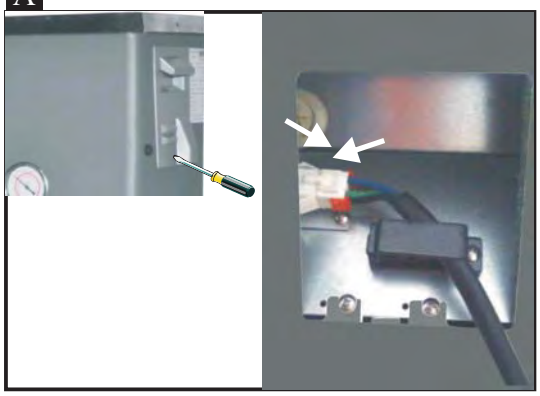

Take off small handle in outdoor unit, connect the cable by connecting the quick couples together.

B

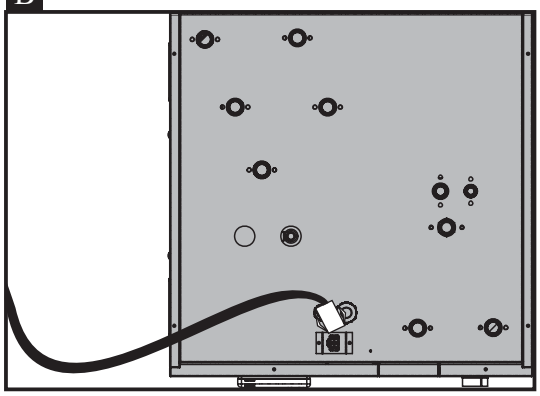

Connect the other end of the cable, to the quick connector on the top of indoor unit.

1. The default wiring for 6kW heater is for 400V/50Hz/3Ph power supply. Following is how the heater is connected:

Please note: If the wire for this heater need to be changed, the replaced cable should be no smaller than 1.5mm².

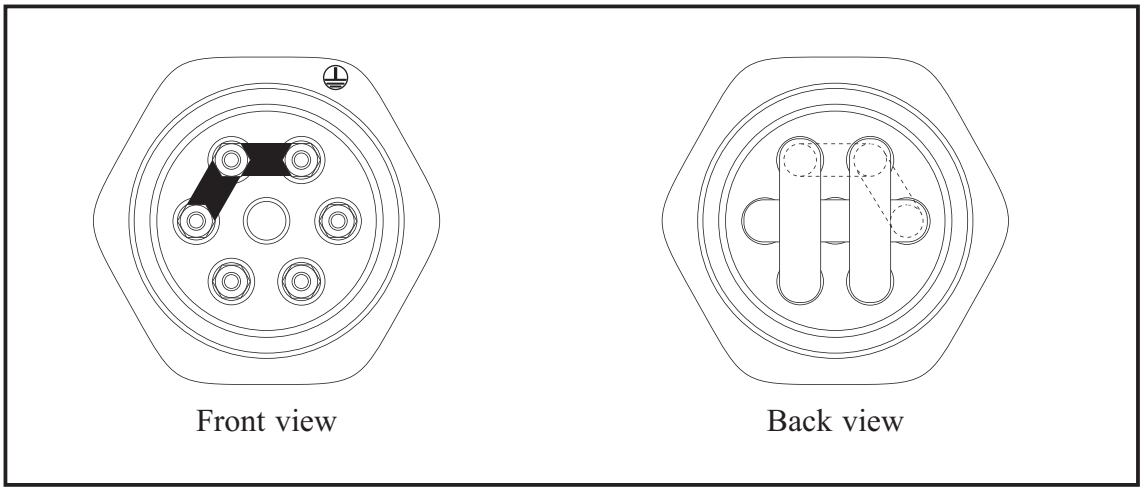

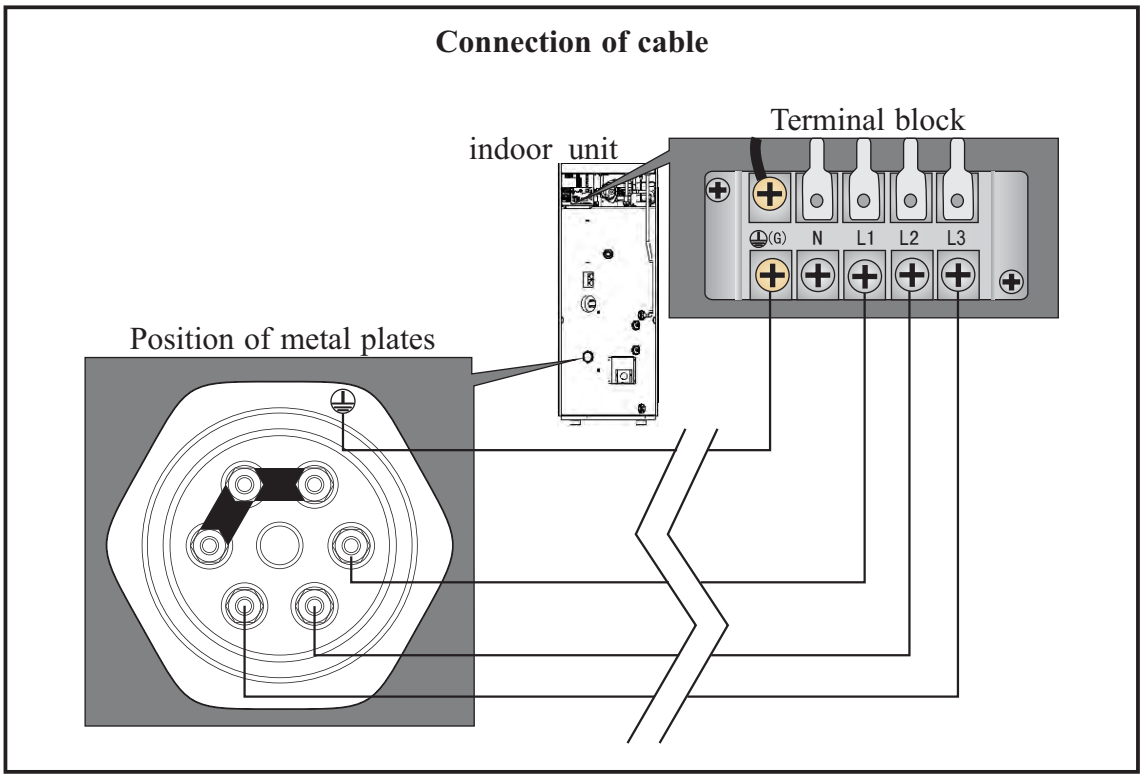

2. If this heater need to work under 230V/50Hz/3Ph power supply, please change the wiring as following:

Note: the cable size should not be smaller than 2.5mm² under this application.

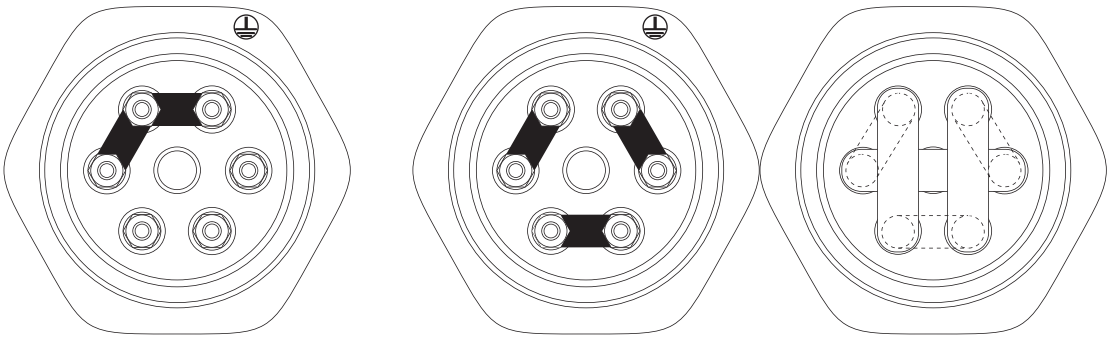

Default position of metal plates

Position of metal plates for 230V/50Hz/3Ph application

Back view

1. Please change the position of metal plates as shown in the picture

Connection of cable

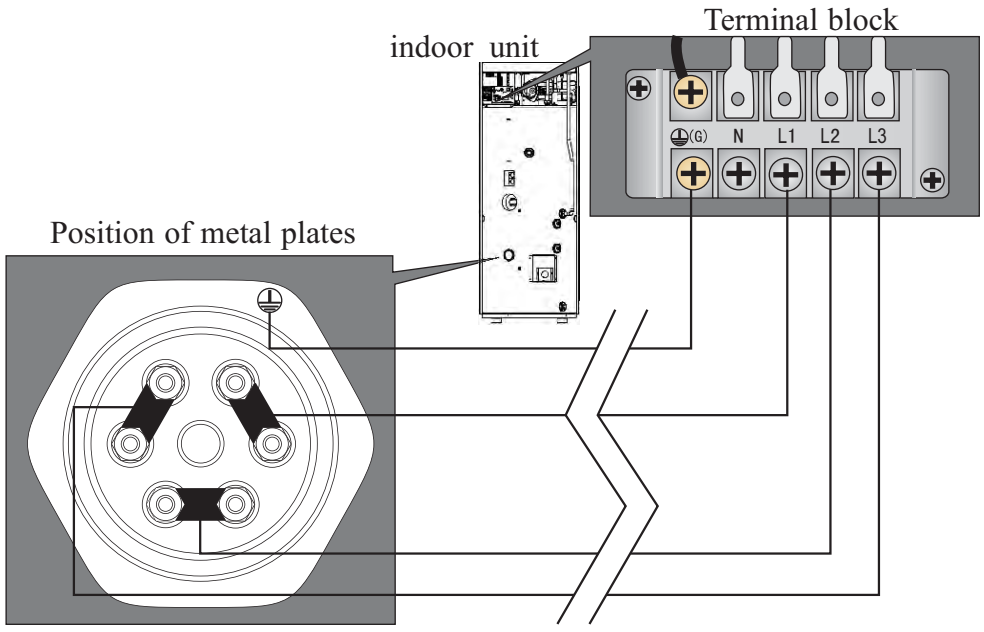

2. Change the way of wiring as shown in the picture.

Please take the refrigerant pipe and accessories from the carton box of piping kit.

When insulating the refrigerant pipe, please insulate each pipe separately (refer to figure 1 below), don't insulate the refrigerant pipes together (refer to figure 2 below).

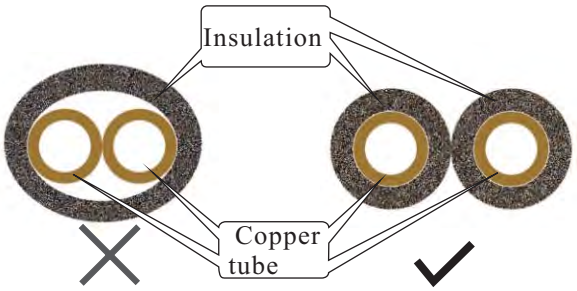

figure 1 figure 2

【Precaution】

The installation kit consists of two gas-filled pipes, drainage hose, sealant, diffusion tape, 2 pipe insulation sections, cable ties and electrical cable with connector arrangement for connecting the indoor unit to the outdoor unit.

Note that the drainage hose must only be used for air/air heat pumps and therefore not for air/water.

NOTE: Do not remove the plastic plugs on the pipe sections until the installation of the pipes has begun.

【Holes】

Start by drilling with the detection drill to check that there are no obstacles in the way and that the hole on the outside will be correct. Holding the detection drill sideways, feel inside the wall if there is anything in the way around the detection drill's hole.

If there is nothing obstructing the detection drill, the wall bracket can be fitted and the hole (about 80mm) drilled. Check the dimension or the supplied wall bushing.

Set the drill at low speed to prevent a build-up of heat and the saw teeth becoming "sticky". It is also g good idea to pre-drill with a 12-15mm bit so that any chips in the wall can run out.

【Installation】

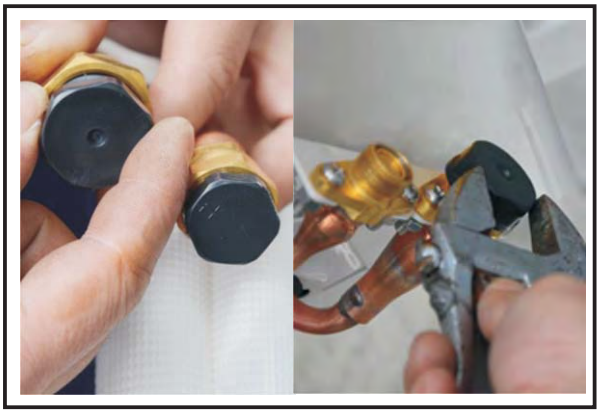

Start the installation of the pipe kit at the indoor unit and then straighten out the pipes gradually. On the ends of the pipe lengths(installation kit) there are two loose screw connections. There are two fixed nipples on the units' pre-fitted pipe sections. The pipe lengths' loose screw connections must be screwed to the units' fixed nipples. These cannot be installed incorrectly, but it is very important when connection that the nipple is held in a fixed position, while the second spanner screws on the coupling.

Now connect the pipes from the installation kit with the fixed nipples on the indoor unit couplings. Start by threading together all the screw connections by hand. Then use the spanners to tighten the coupling. Complete the connection without stopping (a hissing sound may be heard), use a counterhold and tighten the coupling securely.
Tightening min. torque 18 Nm. Use a torque wrench when in doubt.
Never under any circumstances tighten the fixed nipples with the spanner. Use one of the spanners only as a counter hold when connecting. It should be noted that if you do not use a counter hold, you risk turning the nipples on the indoor unit too much and rendering them useless. The couplings have to be tightened around 24 h after the installation has been completed.

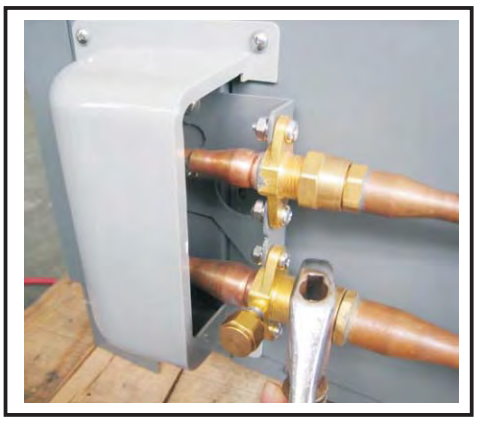

IMPORTANT:
Note that the pipes in the installation kit are filled with gas and must not be cut under any circumstances.
The plastic plugs on the ends of the pipe must not be removed until the pipes are to be connected. If the pipes are bent and causing leakage, the couplings must be loosened so that the non-return valves close.

【Pipe routing】

IMPORTANT:

Continue the pipe from the indoor unit to the outdoor unit and connect the pipe fittings in the same way. The radius at pipe bends must not be less than 15 cm. Use a cardboard template to check this. Run the power cord along with the pipes. Create the bends gradually and carefully. You must not bend the pipe straight across, for example, to the edge of the hole in the wall.

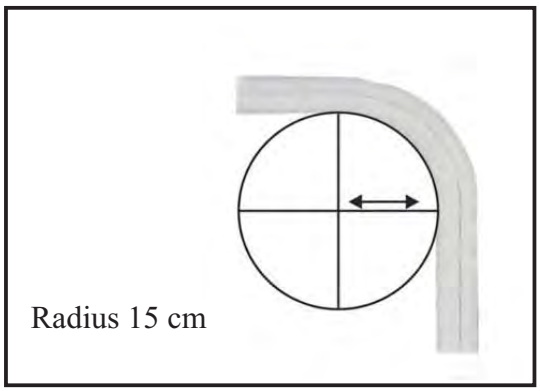

【Connecting the installation kit】

There are two types of refrigerant piping connectors, flare nut and quick connector. It depends on different models.

【A：Quick connector】

On the ends of the pipe lengths (installation kit) there are two loose screw connections.

There are two fixed nipples on the outdoor unit's pre-fitted pipe sections. The pipe lengths' loose screw connections must be screwed to the units' fixed nipples.

These cannot be installed incorrectly, but it is very important when connecting that the nipple is held in a fixed position (counterhold), while the second spanner screws on the coupling.

Connect the pipes from the installation kit with the fixed pipes mounted on the outdoor unit. Start by screwing together all the screw connections by hand.

Then use the spanners to tighten the coupling. Complete the connection without stopping (a hissing sound may be heard), use a counterhold and tighten the coupling securely.

Never under any circumstances tighten the fixed nipples with the spanner. Only use the spanner as a counterhold when connecting. It should be noted that if you do not use a counterhold, you risk turning the nipples on the outdoor unit too much and rendering them useless. Check and tighten the couplings about 12-24h after installation.

Check the couplings for leaks by applying some soap and water. Check for bubbles.

Check the seals and tighten the couplings again 12-24 hours after installation. Check for leaks by wetting with soapy water. Also check the connections at the indoor unit. If no bubbles appear, the couplings are properly connected and tightened!

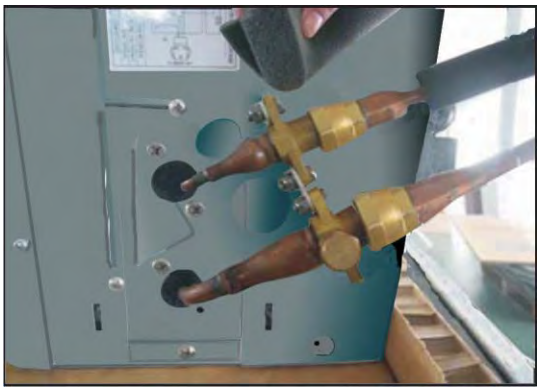

【B：Flare nut】

Note: When vacuuming the system,please don't turn on the high/low pressure valve. Otherwise refrigerant leaks.

AW 6-IOU-V5:
A–1/4″ liquid valve
B–1/2″ gas valve

AW 11-IOU-V5:
A–3/8″ liquid valve
B–1/2″ gas valve

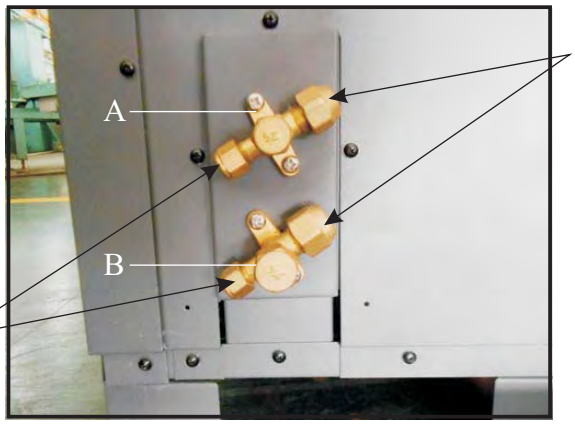

Note: When vacuuming the system,please don't turn on the high/low pressure valve. Otherwise refrigerant leakage.

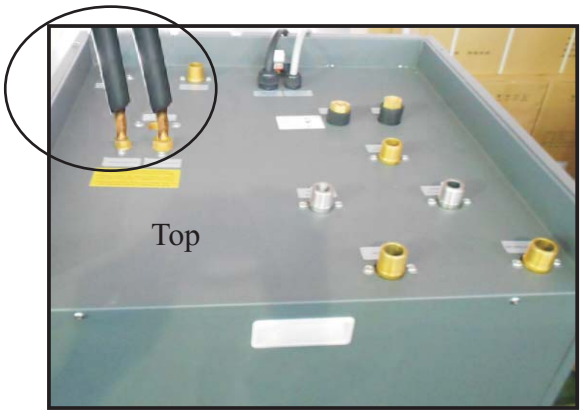

1. Connect the refrigerant piping to the indoor unit.

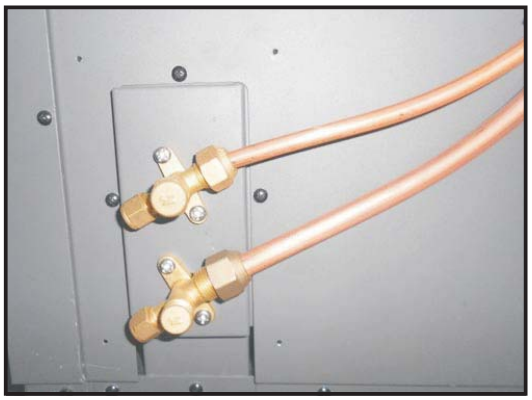

2. Connect the other ends of the refrigerant pipe to the outdoor unit.

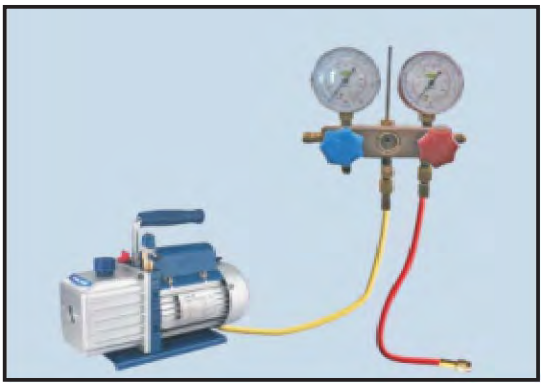

3. Prepare a vacuum pump and a pressure gauge, connect one tube of the pressure gauge to the vacuum pump.

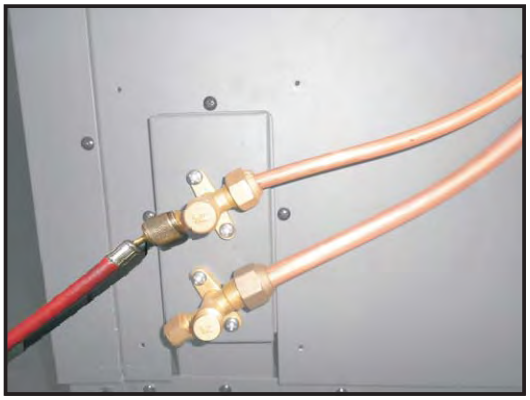

4. Connect the other tube of the pressure gauge to the outdoor unit.

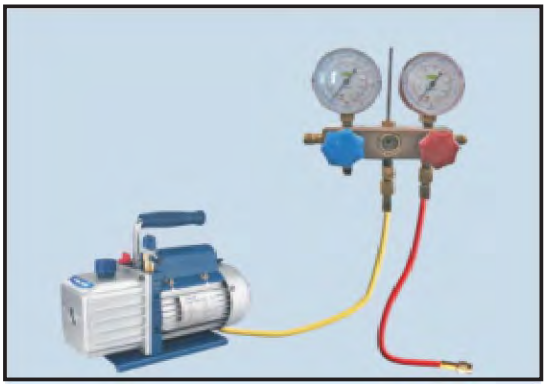

5. Open pressure gauge, and start the vacuum pump to vacuum the unit for around 10 minutes. When the pressure gauge shows negative pressure, close the pressure gauge and stop vacuuming.

⚠ **Attention:** The liquid valve can't be opened until the vacuumizing has been totally finished.

6. Take off the copper nut of the gas and liquid valves, open the valves with hexagon spanner as much as possible.

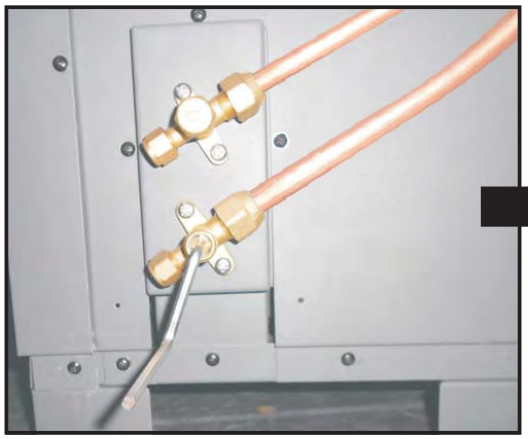

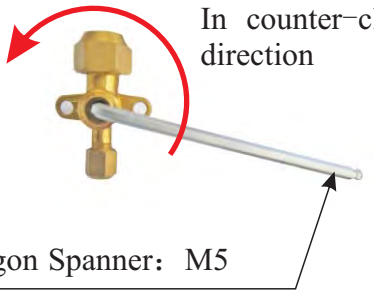

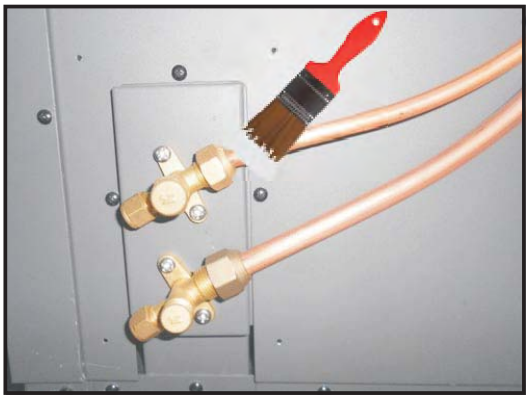

7. Check with leakage detector or soap water if there is any leakage. If not , then put back the copper nuts onto the valves.

After installing the unit, please connect the water inlet and outlet pipe according to the local instructions. Please carefully select and operate the water pipe.

After connection, the water piping should be pressure tested, cleaned before use.

【Water filling】

▲ One way valve:

One way valve must be installed to water filling connector, to avoid back-flow of water when water supply stops or water pressure not enough (one way valve is packed with the unit).

▲ Filter:

A filter (20 mesh/cm^2) should be installed at the water inlet of water tank as well as that of indoor unit, to avoid sediments and guarantee water quality.

▲ Ball valve:

A ball valve is recommend for easy operation of drainage or filter cleaning.

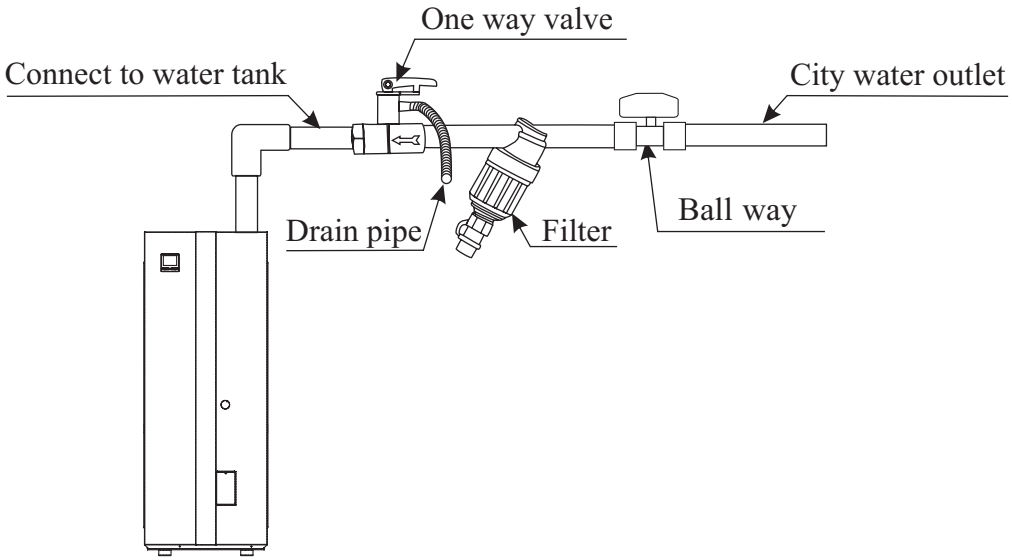

【Connect of drainage pipe】

When the tank need to be drained, please do as per following instruction:

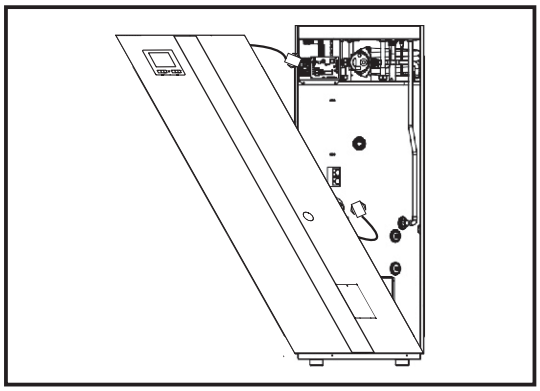

1.Take off the front panel (please take care about the wires in between. Please disconnect all cables in between before the front panel fully opened).

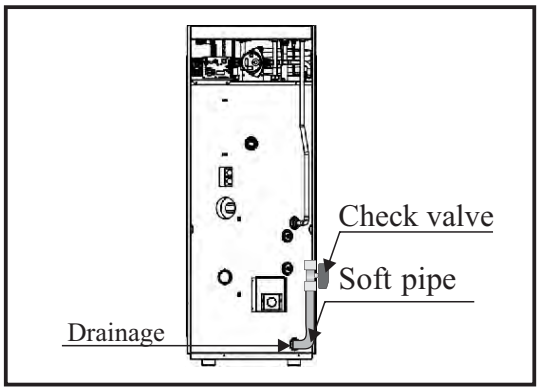

2.A soft pipe and ball valve have already been connected to the tank. Please pull it out from the unit.

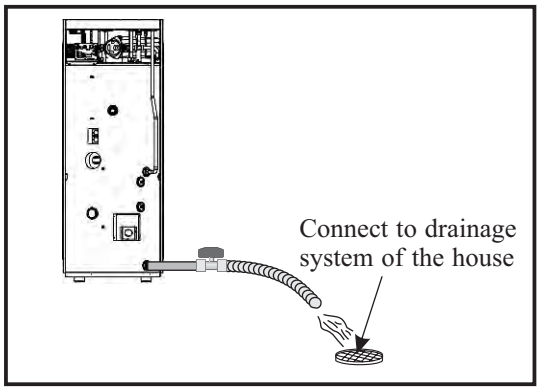

3.Drain the water to drainage system of the house, and open the ball valve to drain out all water inside the tank. Please extend the drainage pipe by connecting another water pipe, if the distance between the unit and drainage system is long.

【Insulation】

All pipes running hot water should be well insulated. The insulation must be tied up tightly without gap (But please don't wrap up the check valve for future maintenance).

Please ensure enough water pressure to deliver the water to the required height. If the water pressure is not enough, please add water pump to increase the pumping head.

【T/P valve】

In order to protect the water tank from too high pressure or temperature, please install the T/P valve packed together with the unit, to the system:

1. Take out the T/P valve from accessories.
2. Apply sealant tape on threads of T/P valve according to the industry standards.
3. Find the connector on the top of tank according to the label, and install the valve onto it.
4. Connect the drainage pipe to the T/P valve as shown in the picture.

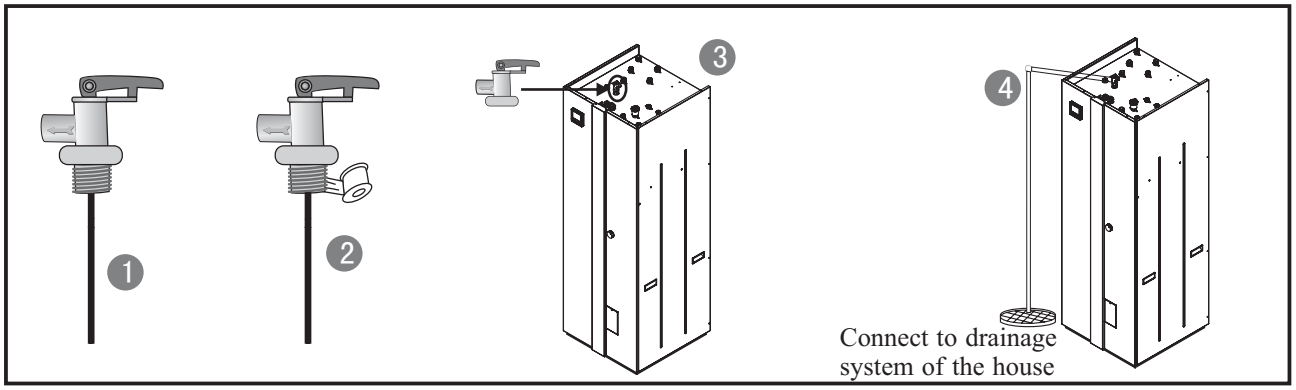

【Automatic exhaust valve】

Automatic exhaust valve is used to pumping out exhaust gas inside the water system.
Please install it to the unit as followings:

1. Take automatic exhaust valve and connector(3/4" to 1/2") out from accessories bag.
2. Connect the connector (3/4" to 1/2") to the valve, and tighten it with a wrench.
3. Apply the sealing tape to the thread of the connector clockwise at least four turns.
4. Connect it to the connector for automatic exhaust valve on top of the unit.

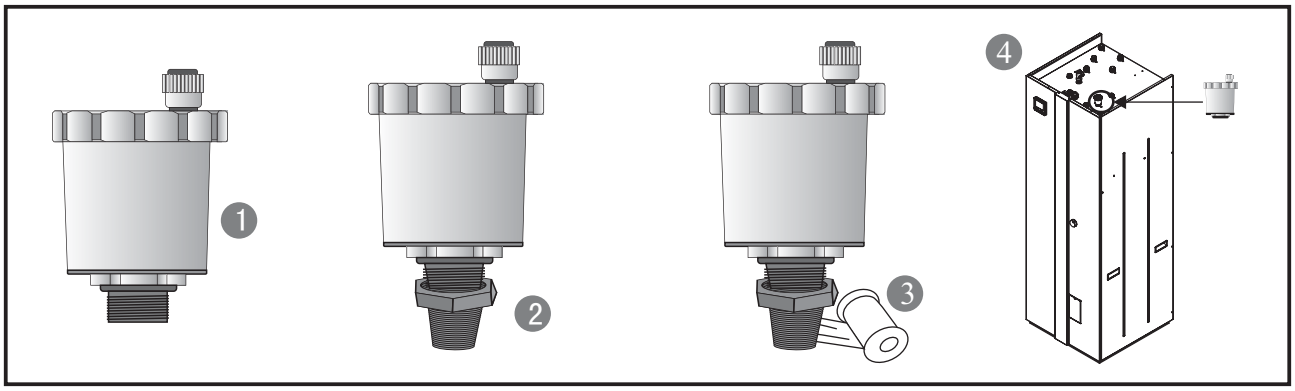

▲ After install the automatic exhaust valve into the right position, please loosen the small screw cap on the top of the valve in order to ensure the gas can be drained away.
▲ When the valve is blocked, do fasten the small screw cap on the top of the valve and then remove the valve and clean it. After done, do install the valve back to the top of water tank and loosen the small screw cap again.

【Water pressure gauge】

For easy checking of water pressure, please connect the water pressure gauge to the unit:

1. Take out the manometer from accessories.
2. Apply the sealant tape on the threads of manometer according to the industry standards.
3. Find the connector on top of water tank according to the label, and install the manometer onto it.

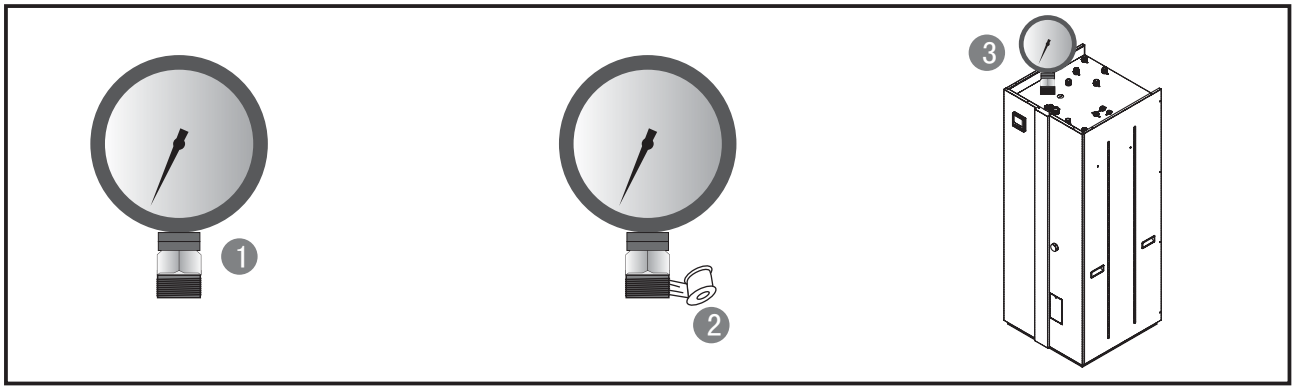

8. Water temperature sensor

The temperature sensor is default placed in "temperature sensor 1" (refers page 5), but if needed, it can be moved to the position of "temperature sensor 2" (refers page 5), as follows:

1. Screw off the cable fixture on plastic cover for "temperature sensor 1" , and pull out the temperature sensor. Please install the cable fixture and its rubber o-ring back to the cap, for future demands.

2. Remove the plastic cover on the position of "temperature sensor 2" for installing the temperature sensor on the water tank, screw off the plastic nut and remove the "O" shape rubber ring.

3. Pass the temperature sensor through the plastic nut and reinstall the "O" shape rubber ring.

4. After the temperature sensor pass through the plastic cover and completely insert into the temperature sensor 2 hole on the tank, please screw tightly the plastic nut.

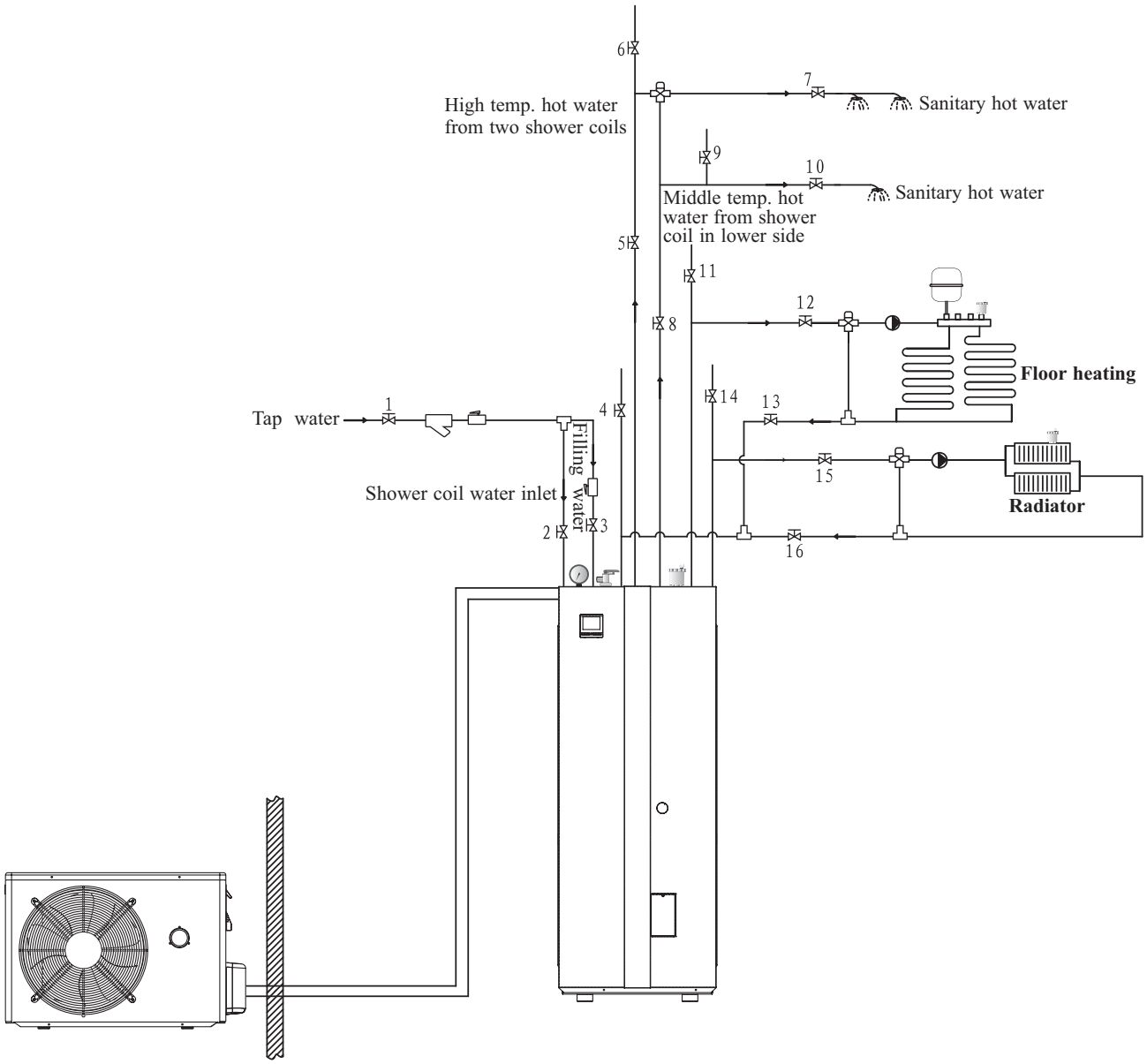

Symbol	Name
	Mixture valve
	Water pump
	Filter
	T/P Valve
	One way valve
	Automatic Exhaust Valve
	Water Pressure Gauge
	Shutoff valve
	Three-way vlave

After finishing the installation, please refer the application illustration on page 34 and proceed with the following steps to discharge the air in the system:

Evacuation of water tank
1. Close ball valve 2 and open ball valve 4,11,14.
2. Open ball valve 3 and 1, tap water enters into the water tank till water flows out from ball valve 4,11,14. Close ball valve 4,11,14.
3. The air purging valve and T/P valve discharge the air till water comes out from air purging valve and T/P valve without any air bubble.

Evacuation of shower coils in water tank
1. Close ball valve 7 and 10.
2. Open ball valve 2,5,6,8,9, some water enters into the shower coils in water tank till water flows out from ball valve 6 and 9. Close ball valve 6 and 9.
3. Open ball valve 7 and 10, till water comes out from two sanitary hot water outlets.

Evacuation of floor heating and radiator system
1. Open ball valve 1.
2. Open ball valve 12,13,15,16, to fill the water in the whole end system.
3. Use the air purging valve in the end system(floor heating and radiator system) to discharge the air till water comes out from the air purging valve.
4. Keep the ball valve 12,13,15,16 open. Close the air purging valve in the end system.

Note: During the whole process of air purging and after air purging is finished, keep the ball valve 1 open, and the ball valve of drainage inside the water tank should be closed.

【Check before pre-start up】

Before start-up, please check the following items:

A. Check if the water pipes are connected well and if there is any leakage;

B. Make sure the water supply valves are open and the water flows smoothly;

C. Check if the power cable is connected well and properly grounded, and if the cable is broken or not.

D. Make sure the indoor and outdoor units have been installed in a flat and solid location.

E. Check if the power supply corresponds with the pecifications on the label.

F. In cold area, please ensure the supply water flow is smooth without freezing.

G. Check if the refrigerant pipe and water pipe are well insulated.

If everything above is OK, the unit can start up.
If any of them fails, please fix it.

【Pre-start up】

A. When the installation of unit is completed, water system pipes are well connected and air purging is done, no leakage or other problems, the unit can be powered to start up.

B. Turn on the unit, press the on-off button on the operation panel to start the unit.
Please check carefully if there is some abnormal noise or vibration, or the display of wired controller is normal or not.

C. After the unit is working properly for 10 minutes, without any problem, then the pre-start up is completed; If not, please refer to the Service and Maintenance chapter in this manual to solve the problems.

D. Keep the unit running check if the supply water temperature is the same as shown on the wired controller. If the water is not heated properly, please refer to “Trouble Shooting” to check the possible causes.

It is suggested not to run "heating" or "hot water" mode, when ambient temperature is over 32 ℃, otherwise unit may go into protection mode easily.

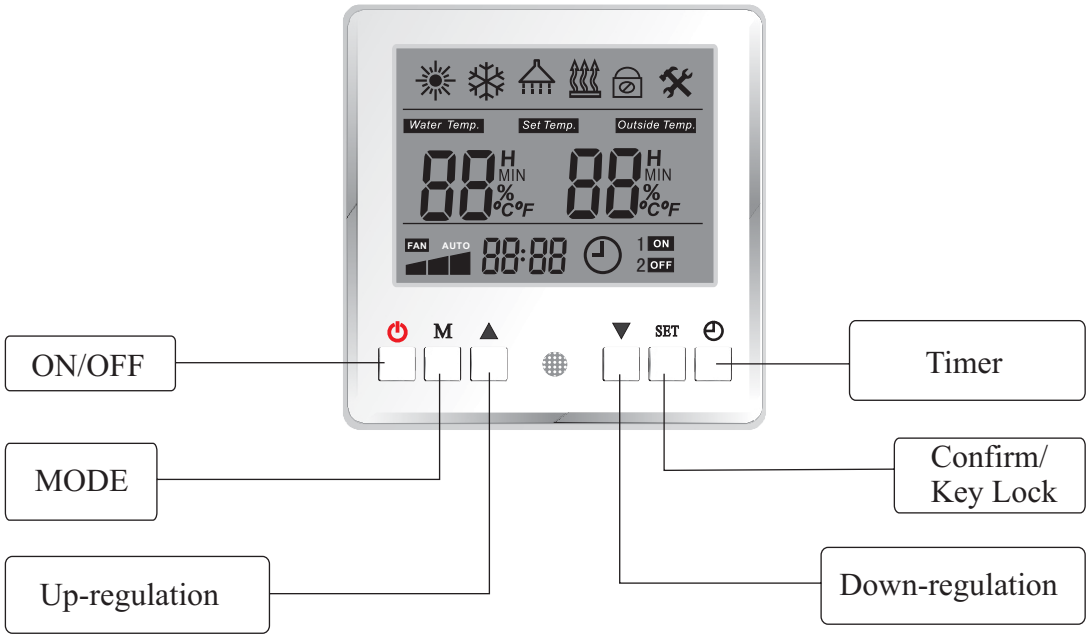

Display	Meaning	Function
	Heating	When the unit works in heating mode, is ON.
	Cooling	When the unit works in cooling mode, is ON.
	Hot water	When the unit works in hot water mode, is ON.
	Defrosting	When the unit works in defrosting, is flickers.
	Key lock	When buttons are locked, is ON.
	Parameter setting	When parameter setting is activated, is ON.
88	Value or code	To display temperature,timer,parameter,error code and so on.
88:88	Time	Timer will be shown here in 24 hours after setting. Set value will be saved and recover automatically after repower.
Water Temp.	Water temperature	When water temperature mode is activated, Water Temp. is ON.
Set Temp.	Set temperature	When changing the set temperature, Set Temp. is ON.
1 ON 2 OFF	Timer function	When timer function is activated, is ON.
%	Too low water temperature protection	If water inlet temperature is too low in heating mode, "%" is ON and unit works with limited compressor speed (for some models only).
H	Fixed defrosting interval time	When unit is set to fixed defrosting interval time model, "H" is ON.

Standby

The unit is standby when it is fed with power.

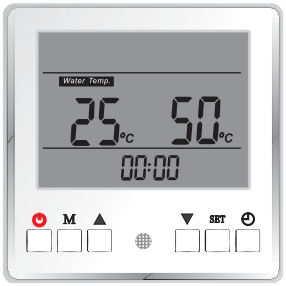

ON/OFF

When the unit is standby,press ⏻ to turn on the unit.
The unit will work in its last working mode.
Press ⏻ again to turn off the unit.

☆After repower the unit, unit will recover to heating mode automatically. Please change the setting to what you need, if needed.

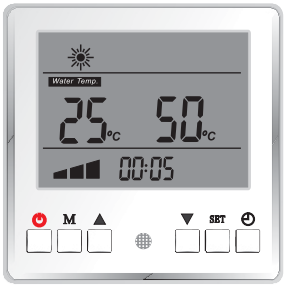

Mode selection

Press M to choose the unit operation mode.It comes in the sequence:

→Heating ☀ →Hot water ❄ →Cooling ⌂ →

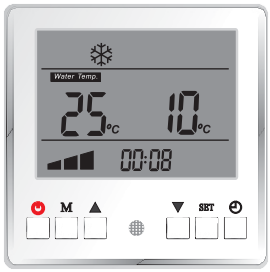

Too low water protection

When the unit work in heating model,if inlet water temperature is too low, in order to protect compressor, compressor will work with limited speed,with "%" shown on the display.

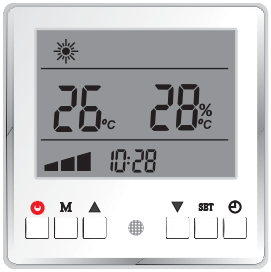

Key lock

When unit is powered,press SET for 5 seconds,to lock all the buttons,with 🔒 shows.Press SET for 5 seconds again, to unlock all the buttons.

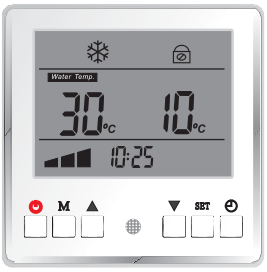

Temperature setting

When the unit is ON,press ▲ once,the set temperature incteases by 1℃ ; press ▼ once, the set temperature decreases by 1℃. Keep on pressing ▲ or ▼ ,the temperature can be increased or decreased by 5℃.

When changing the set temperature, Set Temp. is ON.

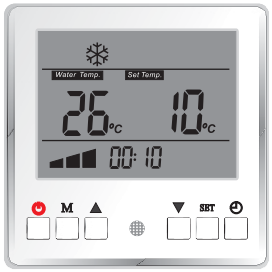

Note:Press ▲ or ▼ at unit standby mode for parameter inquiry.

Parameter setting

When power is fed and unit in standby mode press ▲ or ▼ to choose target Parameter.

Press SET to activate parameter setting process when parameter flickers.User can set its value with button ▲ or ▼;Press SET again to confirm the setting work:otherwise the setting Value will not be saved,and the system will exit this parameter setting program automatically in 10 seconds,or by pressing ⏲.

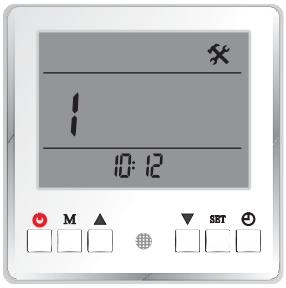

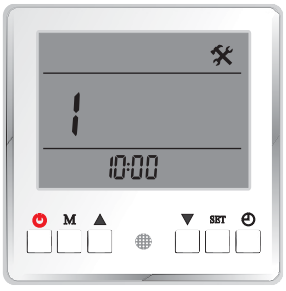

Parameter 1
Parameter 1 indicates the local time.The time is always presented in the 24-hour system.

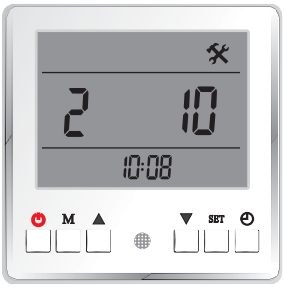

Parameter 2
This parameter has no function in this unit.

Parameter 3
Parameter 3 indicates the duration time for back light.It can be set to 00,10,20,and 30. While 00 means the back ligh is always ON,and 10,20,and 30 means the duration time for back light is 10 seconds,20 seconds and 30 seconds.

Timer function

To set the ON timer, press button, shown on the display. Press ▲ to set the timer in hours, and press ▼ to set the time in minutes. Confirm ON timer setting by pressing SET. Press again to activate OFF timer setting and the value can be adjusted in the same way. After done, confirm OFF timer setting by pressing SET .

After timer setting done, press button again to set the set temperature in timer working period. Set value can be adjusted by pressing ▲ and ▼. Confirm settings by press SET . Press again at this moment, system can enter into second ON OFF timer setting, with shown on the display.

Confirm the settings by pressing SET otherwise settings will not be saved.

After settings confirmed, press SET again, or no operation for 10 seconds, system will quit timer setting mode.

Timer ON

Timer ON setting doesn't function when the unit is working.It will be activated when unit is turned OFF.

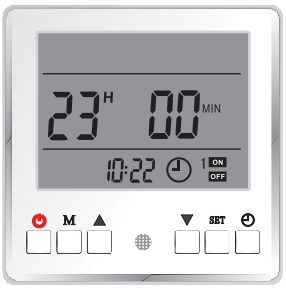

Timer OFF

Timer OFF setting only functions when unit is ON. It will be activated when the unit is turned ON.

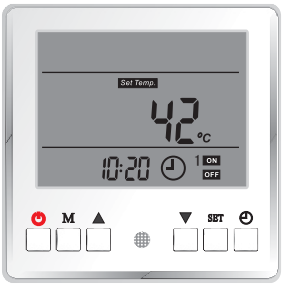

Temperature setting in timer working period

When unit works in timer working period (time between timer ON and OFF), system will take this set value as the set temperature, instead of the set value of the last working mode.

★Timer setting can be cleared by pressing button for 5 seconds.

Water temperature control/Room temperature control switch

Please mind that when the unit works in room temperature control mode, it may not supply sanitary hot water with high enough temperature.

When switching between the water and room temperature control mode the heat pump running mode may also changed. So please short push on the M-button to change to the correct running mode. (Heating – Hot water - Cooling).

When unit is working or in standby mode, keep on pressing "M" button to choose water temperature temperature or room temperature as the control target .

When water temperature is set as the control target, "Water Temp.""Set Temp." is ON;

When room temperature is set as the control target, "Water Temp." is OFF.

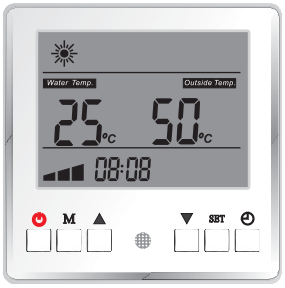

Water temperature control

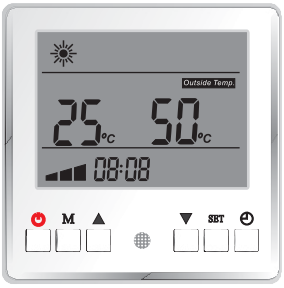

Room temperature control

Anti-freezing protection in winter

When unit is in standby mode, if ambient temperature is lower than5℃, then water pump works for 1 minute in every 10 minutes, unit show P1 code.

When unit is in standby mode and water temperature is set as the control target, if ambient temperature is lower than 0℃ and water temperature lower than 3℃, unit show P2 code and start to work in heating mode till water temperature higher than 8℃ or ambient temperature higher than 3℃.

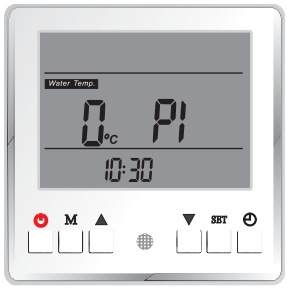

Anti-freezing protection-1

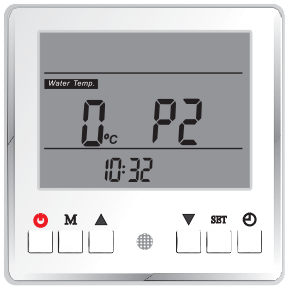

Anti-freezing protection-2

Note:Only when water temperature is set as the control target,the unit will work in heating mode.

Change of defrosting interval time

When unit is working in heating or hot water mode, pressing ▲ and ▼ at the same time for 5 seconds, defrosting interval time logic can be changed. Fixed 45 minutes defrosting interval time will be indicated with a symbol "H" blinks on the display,and when self-learning logic is activated, symbol "H" will disappear.

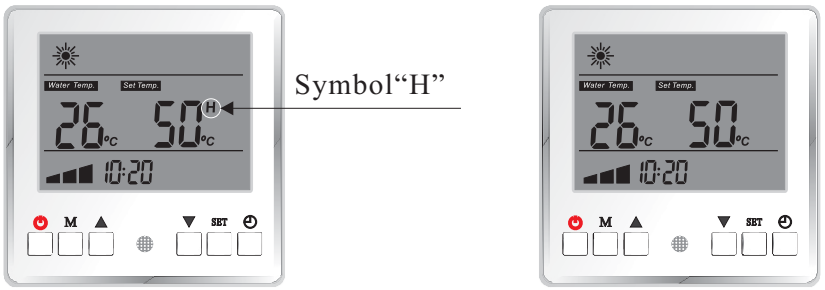

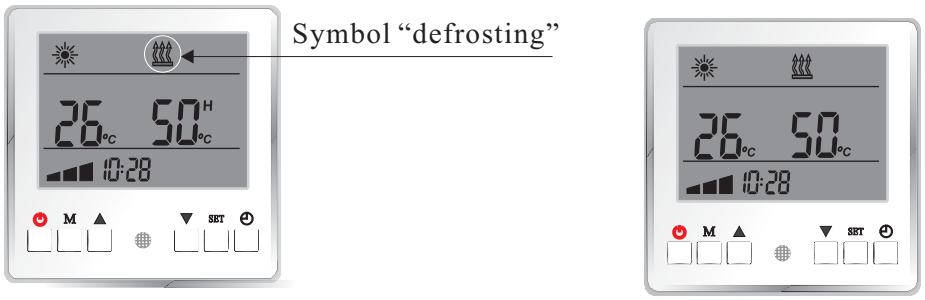

▲Timer defrosting

▲Adaptive defrosting

Protection and failure code

When system is meeting some protections or failures, correspondent protection or failure codes will be shown on the display, e.g. E2 failure.

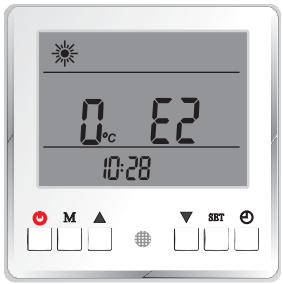

E2 failure

3. Error code

Error codes	Causes	Ways to check and remedies
P1	Anti-freezing protection-1	System will turn on the water pump automatically for anti-freezing purpose.
P2	Anti-freezing protection-2	System will work in heating mode to warm up the water automatically for anti-freezing protection.
E0	1.Wire connection between wired controller and PCB open or short-circuited.	1. Cheak whether the wire connection gets loose.Fasten it.
	2.Wired controller failure.	2.Change it.
E1	1.Wire connection between wired controller and PCB open or short-circuited.	1. Cheak whether the wire connection gets loose.Fasten it.
	2.Wired controller failure.	2.Change it.
E2	1.temp.sensor open or short-circuited.	1.Measure with a multimeter at 20K to check whether it is shirt-circuited or open.If yes,change it.
	2.temp.sensor resistance drifting.	2.Measure with a multimeter at 50K to check the sensor resistance. Take ambient temp.into consideration.If it isdrifting,change it.
	3.Temperature sensors not well connected to the wired controller.	3.Check whether the sensor connection gets loose. Fasten it.
F2	1.water inlet Temp sensor failure.	1.Check whether the sensor connection gets loose. Fasten it. 2.Wire connection between wired controller and indoor PCB open or short-circuited. 3.Water inlet Temp. sensor resistance drifting.
	2.water outlet Temp sensor failure.	1.Check whether the sensor connection gets loose. Fasten it. 2.Wire connection between wired controller and indoor PCB open or short-circuited. 3.Water outlet Temp. sensor resistance drifting.
	3.Coil Temp sensor failure.	1.Check whether the sensor connection gets loose. Fasten it. 2.Wire connection between wired controller and indoor PCB open or short-circuited. 3. Temp sensor resistance drifting.Temp. sensor resistance drifting.
F1	Communication failure.	1.Check whether port gets loose.Fasten it. 2.Change the PCB. 3.Change the outdoor PCB.
F4	Compressor drive failure、IPM failure、IPM protection(overload)、drive protection.	1.Check whether PFC transducer gets loose.Fasten it. 2.Change PFC transducer.
F3	Current or Voltage detector failure.	1.Change PCB.

F5	EEPROM failure.	1.Check whether EEPROM gets loose.Fasten it. 2.Change EEPROM
F6	Too high coil.Temp in heating.	1.Cheak the water flow of the unit. 2.Too high ambient and water Temp.Reduce the set water Temp.
	Too high pipe Temp in cooling	1.Check the water flow of the unit 2.Too low ambient and water Temp.Increase the set water Temp.
	Over-current protection	1.Check the water flow of the unit 2.Too high (low)ambient, and too high(low) set water Temp.Decrease or increase the set water Temp.
F7	Too high or too low voltage	1.Check the voltage of the power supply. 2.Change the outdoor PCB.
F8*	Pressure switch failure	1.Check the pressure of the system. 2.Change the pressure switch.
F9	EEPROM failure	1.Check whether EEPROM gets loose.Fasten it. 2.Change outdoor EEPROM.
Fb	Ambient temp.sensor failure	1.Check whether the sensor connection gets loose. Fasten it. 2.Wire connection between wired controller and PCB open or short-circuited. 3.Temp sensor resistance drifting.
	Pipe temp.sensor failure	
	Compressor discharge temp. sensor failure	
Fc*	System protection caused by too high (low) pressure	1.Measure the high(low)pressure switch with a multimeter to check whether it is shirt-circuited or open. If yes,change it. 2.Check the water flow of the unit.
Fd	System protection caused by the ambient Temp.	1.Check the ambient Temp sensor. 2.Check whether the ambient Temp is too high(low)for working(Ambient lower than -1℃ or higher than 65℃ in cooling,lower than -25℃ or higher than 33℃ in heating.
Fe	Indoor coil anti-freezing protection in cooling operation	When water inlet water temperature in cooling mode is too low, unit stops to protect the heat exchanger and show this failure code.

Difference between F8 and Fc*:

System Pressure Protection

In compressor's operation, when system pressure rise too high and pressure switch turns off, (in system's normal operation, pressure switch keeps on),the controller will lower compressor's running speed by 1Hz/s until pressure switch reconnects. Meanwhile, it records the compressor's current running speed, and takes the value one level lower as the maximum speed. This limit will be released automatically after compressor keeps on running for 2 hours. However, if during this process, similar pressure protection happens again, the controller will records the new running frequency and takes 1 level lower than this new frequency as the maximum speed. And it will release this protection in 2 hours since the time when this new protection happens. If compressor is off, but pressure switch is disconnected for 5 seconds, the controller will judge it as "Pressure Switch Failure″and relevant error code will be shown in wired controller.

For check whether the system have this pressure switch failure or protection is due to hardware failure, we can do like this:

1.Turn the unit off, and cut the power. Leave the unit without power for 10 minutes.

2.Power up the unit.

3.If F8* comes once after power the unit, then it is for sure that it is the pressure switch itself, or the cable loosen that cause F8* failure.

4.If not, then it is for sure that the refrigerant system working abnormal, that caused this high pressure switch failure.

This unit has included two electric heaters inside. Two electric heaters are used to keep the water temperature when heat pump capacity is not enough or heat pump fail to work, as well as heat the water up more rapidly when water temperature is low.

【1.7KW electric heater】

1. 1.7kW electric heater is manually control only. It is not connected with controller of heat pump.
2. Power supply is 230V/50Hz/1Ph, and temperature setting range is 30~75℃.
3. This heater is mainly used to get high temperature sanitary hot water or get hot water faster.
4. If heat pump fails to work, this heater can still work.

Operation knob for 1.7kW heater is on front panel, for easy access. Please refers to following picture.

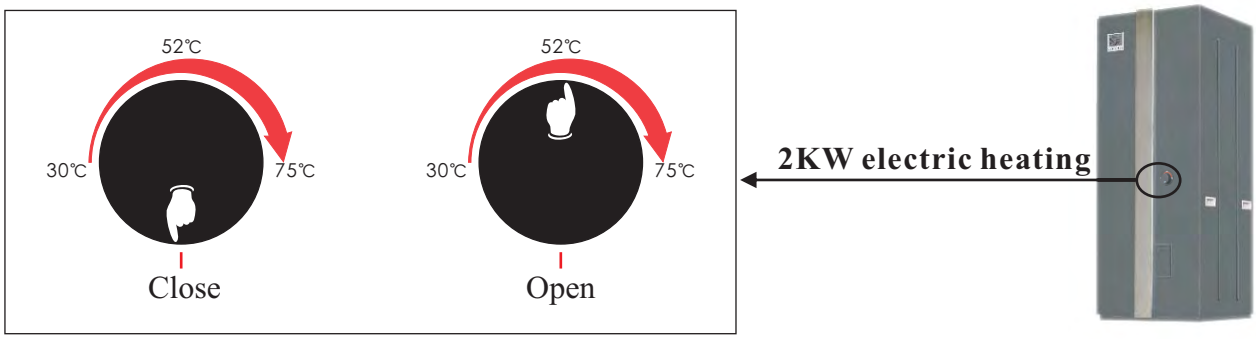

【6KW electric heater】

1. 6kW heater is connected to indoor PCB, and under the control of the unit.
2. Power supply is 400V/50Hz/3Ph, and set temperature range is 30~75℃. If need connect this heater to 230V/50Hz/3Ph, please refer to chapter "Different wiring of 6KW electric heater".
3. On top of the indoor unit, there is a power cable for this heater. Please connect it to a breaker which is enough for 6kW.
4. 6kW is mainly used as an auxiliary heating for house heating.
5. When heat pump fails to work, please set the thermostat of this heater to a correct setting, so it can work as a back-up heater.
6. Please pay special attention to the temperature setting of this heater. If the set value of this heater is higher than heat pump temperature setting, it may happen that main heat would be generated by electric heater, instead of heat pump.

Please do as follows to get access to thermostat for 6kW electric heater:

1

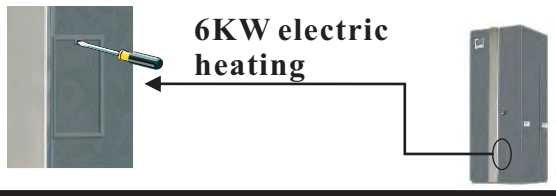

Take off the screw of access door on front panel.

2

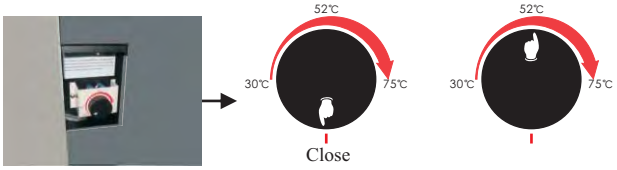

Turn the thermostat knob to set temperature.

3

Put the access door back and fix it with screw.

■ This electric heater is set to turn on when water temperature drops to 30℃, in case heat pump capacity is not enough in critical weathers or heat pump fails to work.

■ It can also be set manually to higher temperature when needed. However please always make sure to set it to lower temperature than heat pump set temperature, otherwise the heater will turn on before the heat pump starts to work, and the system will not work efficiently.

A. The user mustn't change the structure or wiring inside the unit.

B. The service and maintenance should be performed by qualified and well-trained technician. When the unit fails to run, please cut off power supply immediately.

C. The smart control system can automatically analyze various protection problems during daily use, and display the failure code on the controller. The unit may recover by itself. Under normal operation, the pipings inside the unit don't need any maintenance.

D. Under normal running, the user only needs to clean the surface of the outdoor heat exchanger per month or quarter of a year.

E. If the unit runs in a dirty or oily environment, please clean the outdoor heat exchanger and heat exchanger by professionals, using specified detergent, to ensure the performance and efficiency of the unit.

F. Please pay attention to the ambient environment, to check if the unit is installed firmly, or if the air inlet and outlet of the outdoor unit is blocked or not.

G. Unless the water pump is damaged, no service or maintenance should be taken to the water system inside the unit. It's recommended to clean water filter regularly or change it when it's very dirty or blocked.

【Indoor unit】

Service on indoor unit as follows: (this operation must be done by qualified personnel)

1. Cut off the power supply
2. Remove the front panel（Be care about the cables in between）
3. Check the electric part

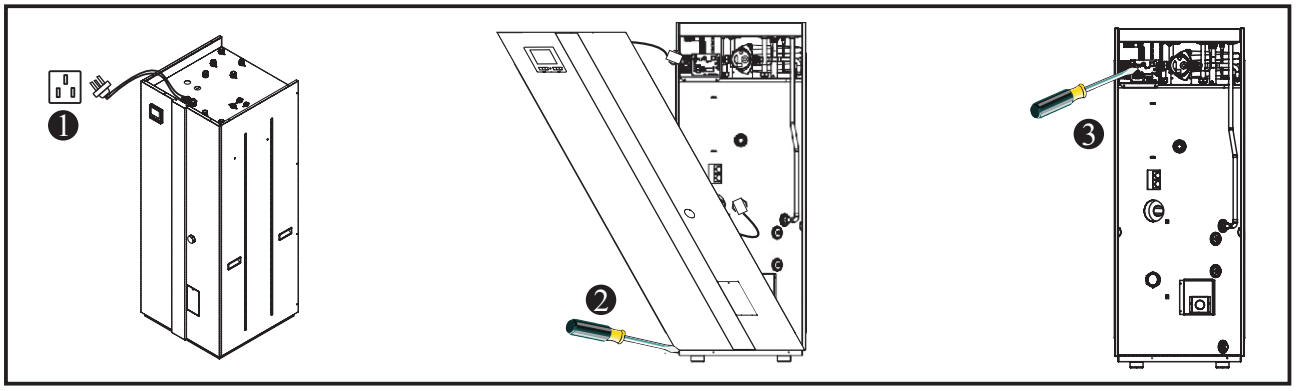

【6KW Outdoor unit】

Service on outdoor unit as follows: (this operation must be done by qualified personnel)

1. Cut off the power supply
2. Remove the top cover
3. Take off the electronic box cover
4. Check the electric part

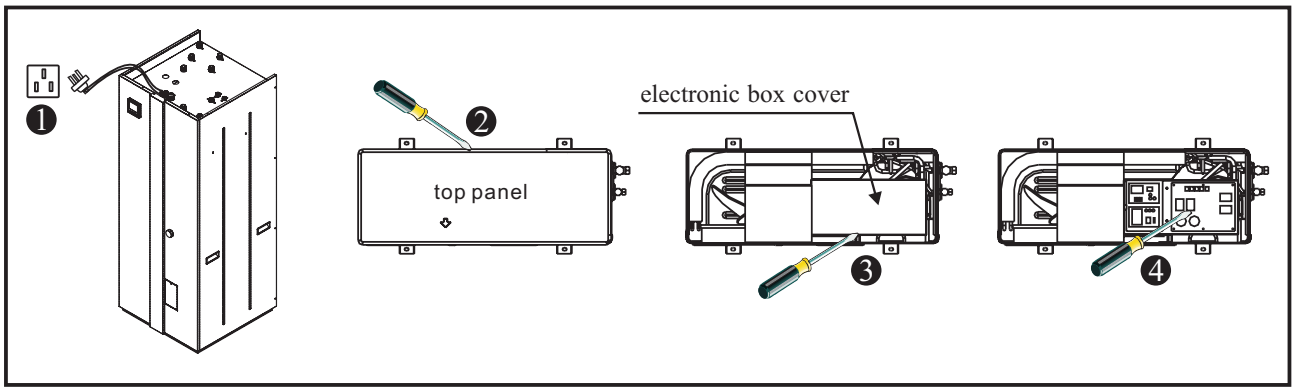

【11KW Outdoor unit】

1.Maintenance of controller

a. Cut off the power supply.
b. Take off the top cover of the unit (see picture a).
c. Take off the electric box cover (see picture b).
d. Do necessary maintenance work to the controller of outdoor unit (see picture c).

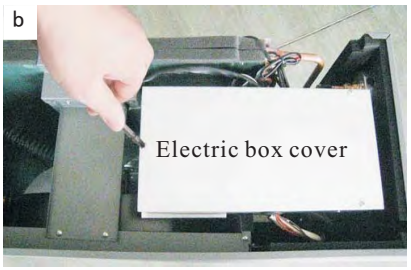

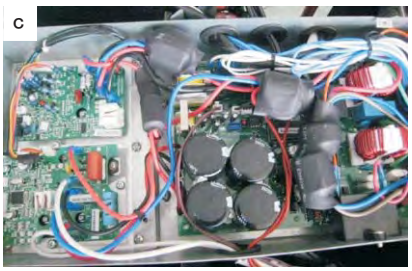

2. Replacement of fan motor

a. Take off screws of the front grill (see picture a and b).
b. Use a wrench to loosen the nut for fan blade and take out the fan blade(see picture c and d).
c. Unscrew the screws of fan motor (see picture e).
d. Then unscrew the small handle (see picture f).

e. Tracking and take out the ground and power cable for fan motor, and take the whole fan motor with cables out. (see picture g, h, i and j).

f. Put the repaired or new fan motor back and connect all cables back.

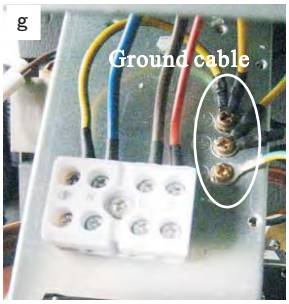

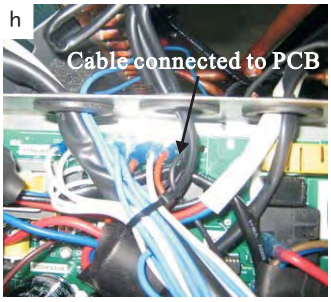

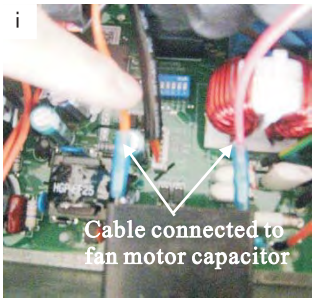

3.Replacement of bottom plate heater

a. Take out the fan blade in same procedure as 4.6.2.

b. Unscrew the fixture of bottom plate heater(see picture a).

c. Disconnect the quick connector for bottom plate heater and take the heater out (see picture b).

d. Put a new bottom plate heater back, and connect it to the quick connector(see picture c).

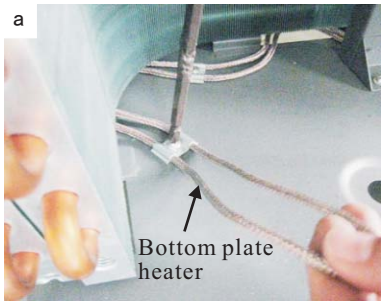

4.Replacement of temperature sensor

a. Take off the back panel (see picture a).

b. Take out the broken sensor from its fixture, and also pull its connector out from the controller.

c.Put the new sensor back and connect it to the same port on controller.

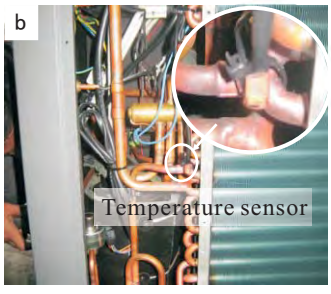

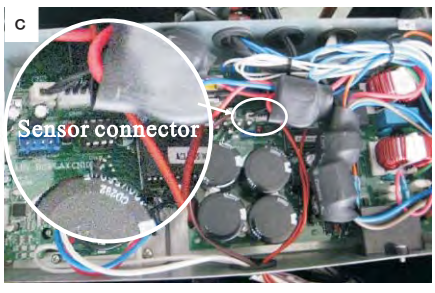

【Cleaning of water filter】

The water filter should be cleaned according to the manual of water filter, to ensure the water flow of the water system. It is recommended to be cleaned once in the first month, and then, once half a year.

【Cleaning of heat exchanger】

Heat exchanger should be cleaned once half a year, because after long term running, gap between the fins of heat exchanger may be clogged up by dust, leaves, plastic films or papers, which will affect the efficiency of heat exchange, please clean the heat exchanger as follows:

A. Use a vacuum cleaner to clean the surface of the fins, to get rid of the dust or other rubbish.

B. Use a soft nylon brush to clean the fins, rinse by water at the same time (please don't rinse with high water pressure). If the outdoor unit is located in an oily place and is hard to clean, please ask for professional service to clean it.

C. After cleaning, please leave the unit at a shady and well-ventilated environment to dry the surface of the unit.

①. Avoid splashing water to the electric part when cleaning.

②. Avoid touching the sharp fins when cleaning, or they may cut your skin. It's recommended to wear rubber gloves before cleaning.

③. The fins of heat exchanger are soft, please don't wipe strongly with hard object, or it may damage the fins.

④. If the unit is working in a salty environment, please clean the heat exchanger more often.

⑤. If the fins have corrosion in surface, please move the unit to a better environment.

【Gas charging】

The refrigerant plays an important role in delivering energy in cooling or heating. Insufficient refrigerant affects directly efficiency of cooling and heating. Please pay attention to the following before adding refrigerant:

A. The work should be done by professionals

B. Please make sure the copper pipe has no leakage before gas charging. If the copper pipes has leakage, please repair or change the pipes firstly.

C. Don't add too much refrigerant than required, or it may cause a lot of failures, such as high pressure and low efficiency.

D. This system uses R410A refrigerant, whose pressure is about 1.6 times than that of R22, so never us R22 or other refrigerant to replace R410A.

E. There must be no air in the refrigerant circulation, because the air will cause abnormal high pressure, which will damage the gas piping and lower heating or cooling efficiency.

F. If the refrigerant leaks in indoor environment, please ventilate the room.

G. Copper pipe must be used for gas pipe. Never use iron pipe, aluminium pipe or alloy pipe.

【Cleaning of plate heat exchanger】

Thanks to the normally very high degree of turbulence in the heat exchanger, there is a self-cleaning effect in the channels. However, in some applications the fouling tendency can be very high, e.g. when using extremely hard water at high temperatures. In such cases it is always possible to clean the exchanger by circulating a cleaning liquid (CIP – Cleaning In Place). Use a tank with weak acid, 5% phosphoric acid or, if the exchanger is frequently cleaned, 5% oxalic acid. Pump the cleaning liquid through the exchanger.This work should be done by qualified person. For further information, please contact your supplier.

【Antifreeze in Winter】

In order to avoid the water inside unit freeze and damage the unit , please don't turn off the unit very often, keep it working or standby when the ambient temp. is below 0℃.

Failure	Cause	Solution
Unit can't start up	1. No power supply	1. Check the power supply
	2. Fuse is broken or circuit breaker is disconnected	2. Check if it's open circuit or if the motor coil is earthed. Then change a fuse and reset the breaker, check if the circuit is stable or the connection is well.
	3. Some kind of protection works	3. Check which protection is working, and clear the protection, then restart the unit.
	4. Wiring is loose	4. Check the wire connection and tighten the screws on the terminal
	5. compressor fails	5. Change a compressor
Fan fails to run	1. Fan motor wire loose	1. Check the wire connections.
	2. fan motor failure	2. Change fan motor.
Low heating performance	1. The coil fins are very dirty	1. Clean the evaporator coil
	2. Air inlet is blocked	2. Remove any object that blocks the air circulation of the unit.
	3. Insufficient of refrigerant	3. Inspect the unit for leakage and fix it if any. Discharge all refrigerant and charge the unit again with correct amount.

Too high noise from the water pump, or no water flow when the water pump is running	1. Lacking of water in water system	1. Check the water filling device. Fill the system with enough water.
	2. Air exists in water system	2. Purging the air out.
	3. Valves in water system are not completely opened	3. Check all the valves to ensure they are fully opened.
	4. Water filter is dirty or blocked	4. Clean the water filter
Too high compressor discharge pressure	1. Too much refrigerant	1.Discharge all refrigerant and charge the unit again with right amount.
	2. Air exists in refrigerantion system	2. Discharge all refrigerant and charge the unit again with right amount.
	3. Inadequate water flow	3. Check the water flow of the system. Use a bigger pump to increase the water flow if necessary.
	4. Too high water temperature	4. Check the value of the water temperature sensor, to ensure it works properly.
Too low suction pressure	1. Drier filter is blocked	1. Change a new one
	2. Electronic expansion valve is not opened	2. Repair or change a new one
	3. Leakage of refrigerant	3.Inspect the unit for leakage and fix it if any. Discharge all refrigerant and charge the unit again with right amount.
Unit can not defrost properly	1. Coil temperature sensor failure	1. Check the position and value of the coil temperature sensor. Replace it if necessary.
	2. Air inlet/outlet is blocked	2.Remove any object that blocks the air circulation of the unit. Clean the evaporator coil occasionally.

The following phenomenon may not be problems of unit itself.
Please contact with a professional maintenance staff for help.

Number	Failure	Solution
1	The unit is not running	When the unit restarts, the compressor will start 3 minutes later (self-protection of compressor), please check if the circuit breaker is disconnected, and if there is normal power supply for the wire controller.
2	Low capacity	Check if the air inlet or outlet is blocked in outdoor unit; check if the setting temperature is too high in cooling mode, or too low in heating mode.

【Indoor unit】

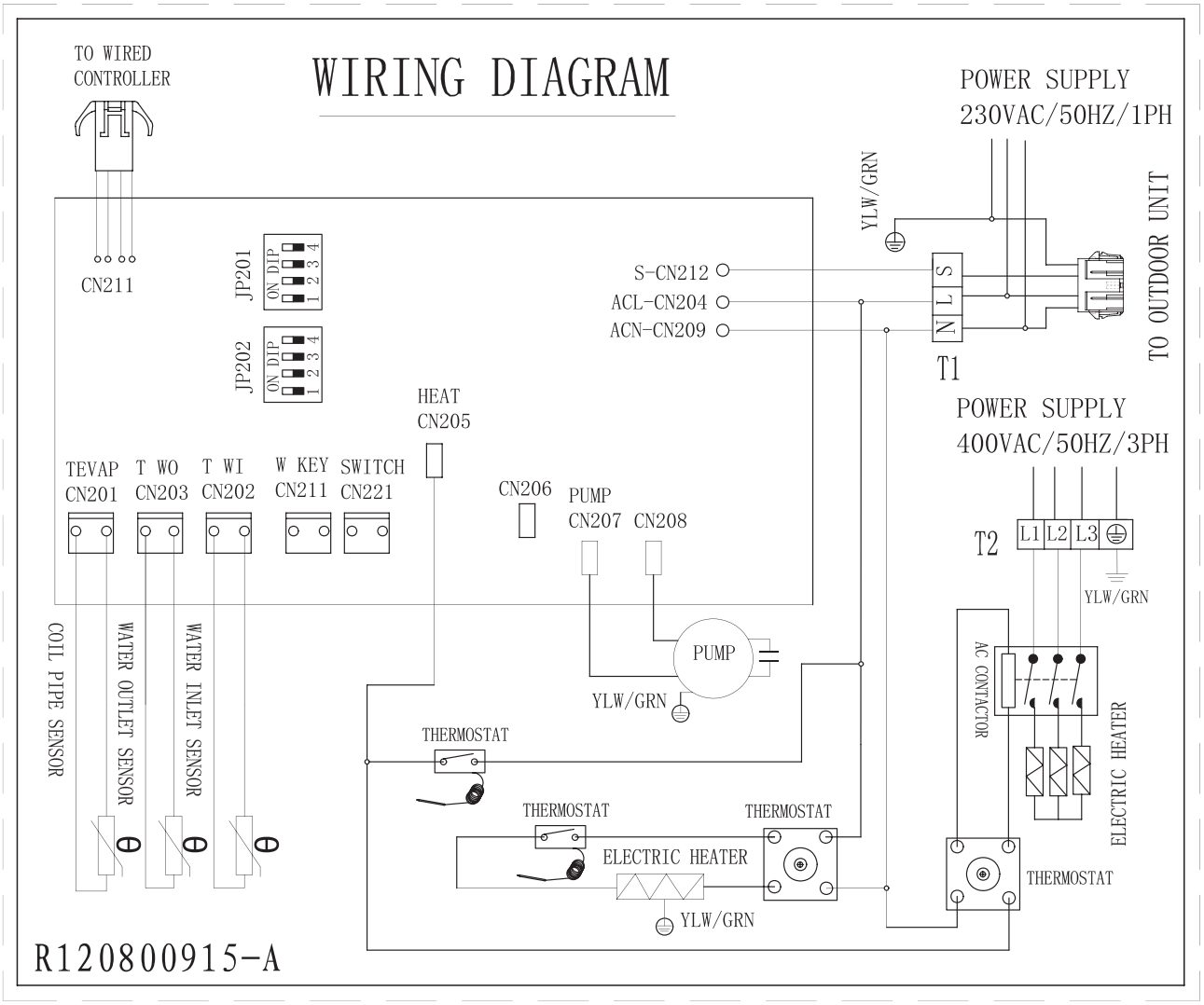

TAKE CARE!
This diagram is subject to change with improvement of the unit. Always refer to the diagram supplied with the product.

【6KW Outdoor unit 】

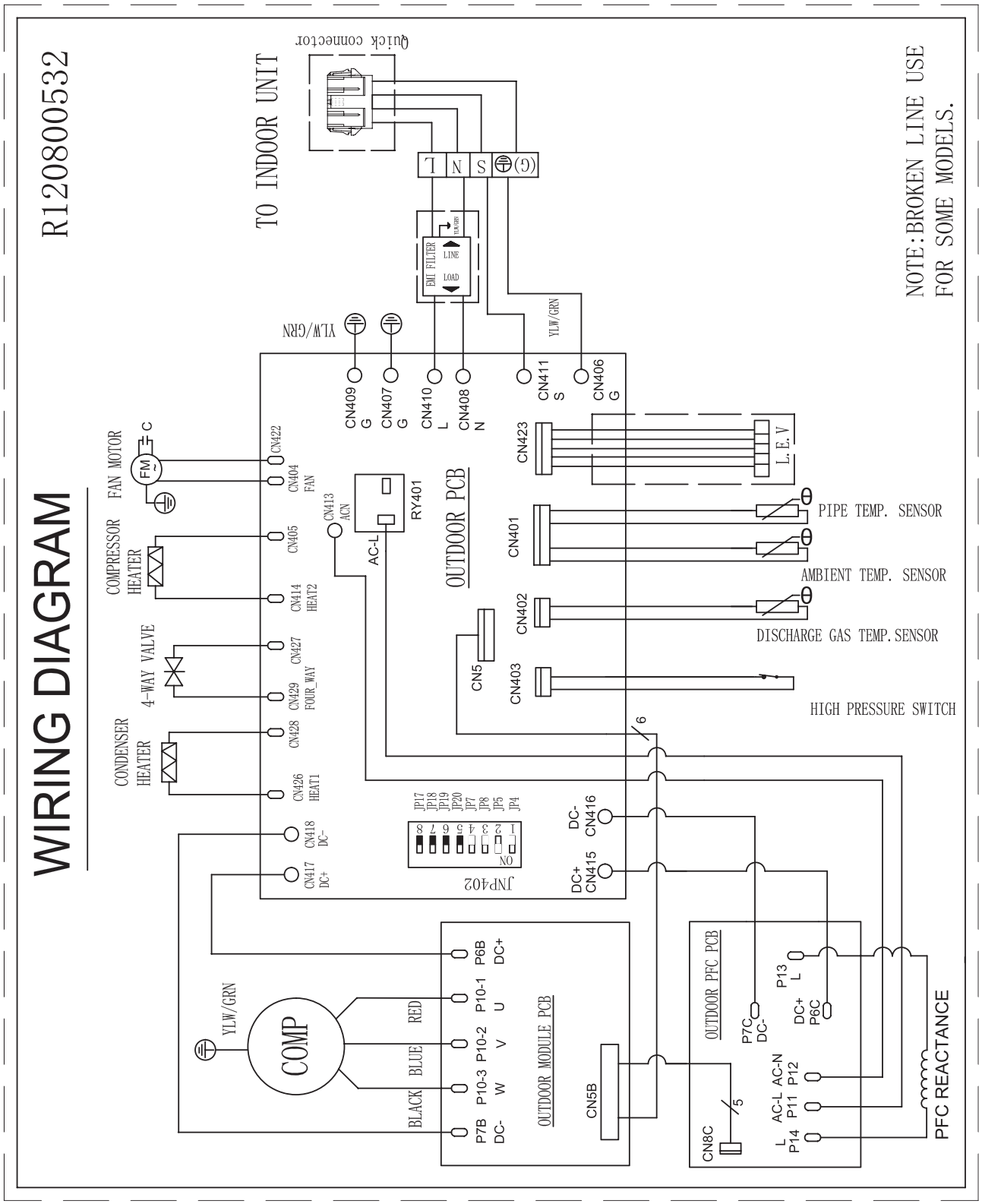

TAKE CARE!

This diagram is subject to change with improvement of the unit. Always refer to the diagram supplied with the product.

【11KW Outdoor unit–Flare nut 】

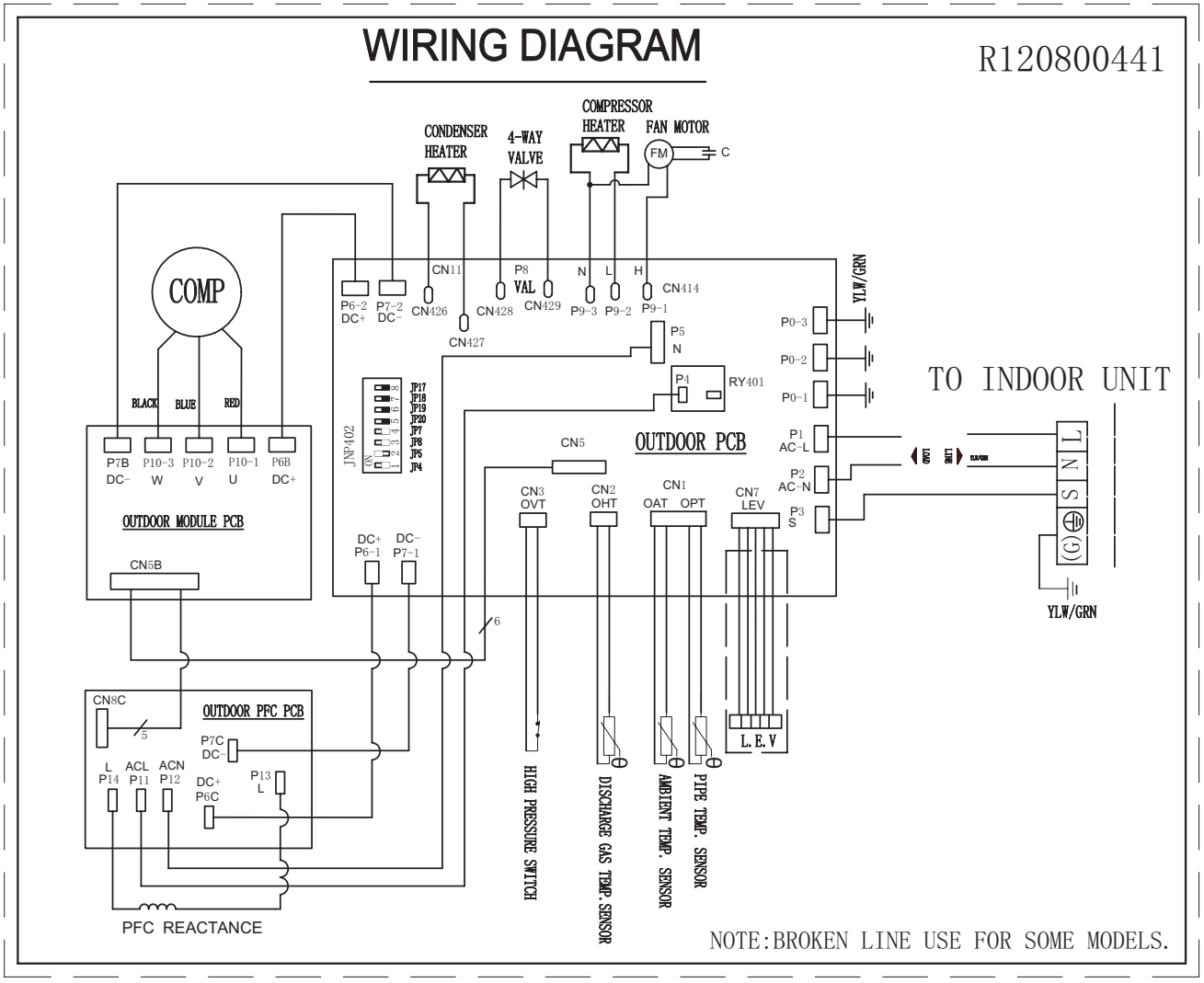

TAKE CARE!
This diagram is subject to change with improvement of the unit. Always refer to the diagram supplied with the product.

【11KW Outdoor unit–Quick connector】

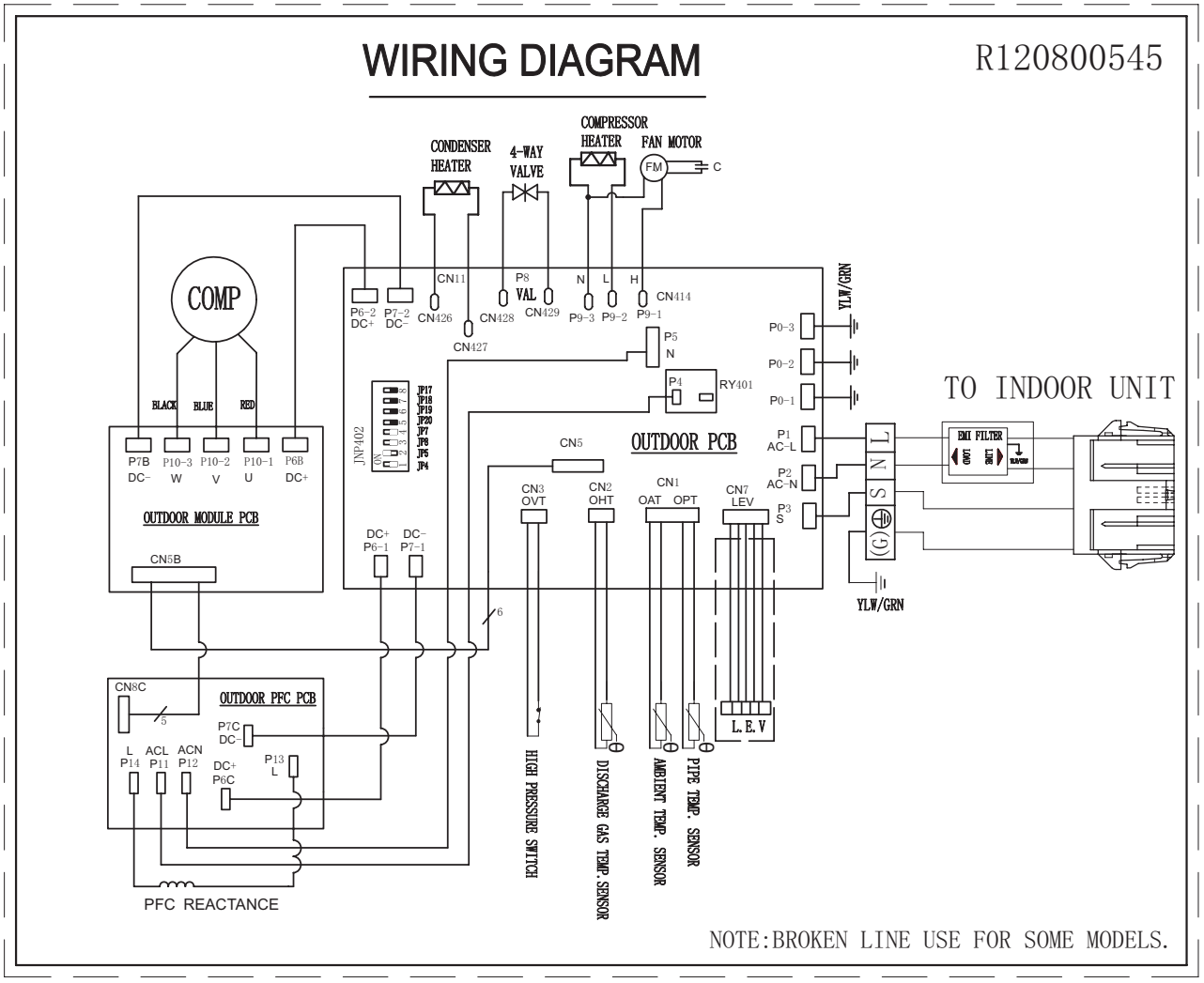

TAKE CARE!
This diagram is subject to change with improvement of the unit. Always refer to the diagram supplied with the product.