RAPID SL
DESIGN + ENGINEERING
GROHE GERMANY

99.514.031/ÄM 237387/09.16

www.grohe.com

Pure Freude an Wasser

GROHE

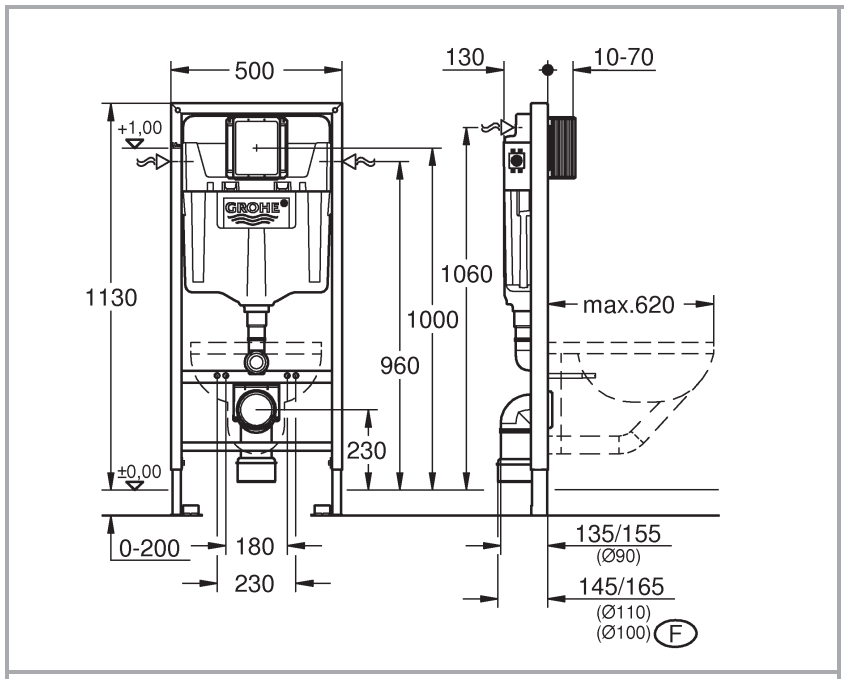

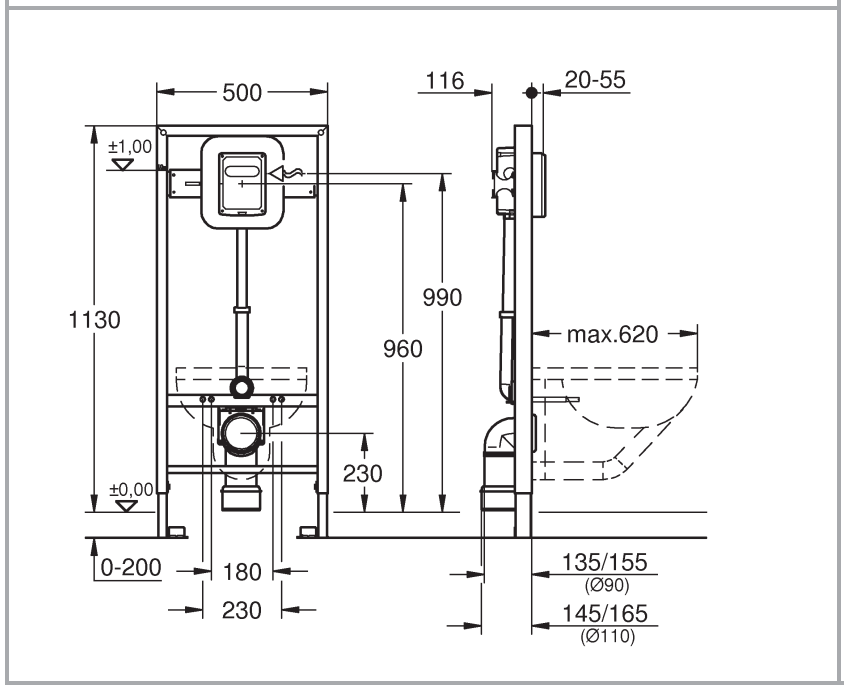

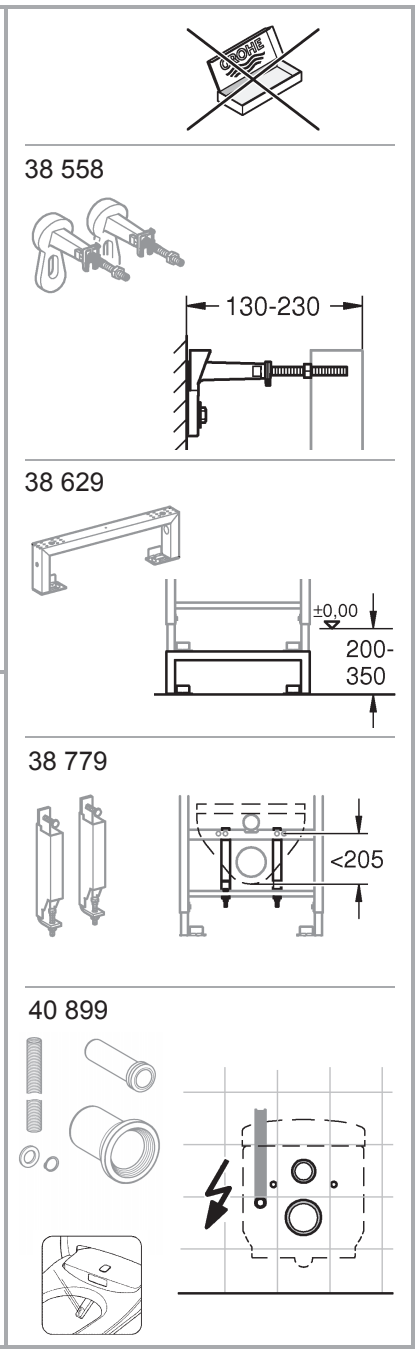

1 - 2

2 - 6

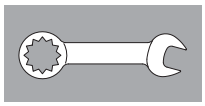

7 - 8

8 - 9

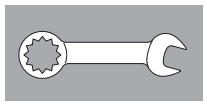
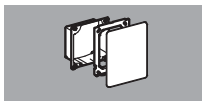
9