Technical Information
Proline Promag L 400

Electromagnetic flowmeter

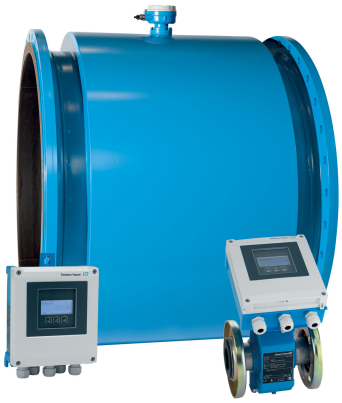

Weight-optimized sensor with a state-of-the-art transmitter for Water & Wastewater

Application

- The bidirectional measuring principle is virtually independent of pressure, density, temperature and viscosity
- Fully suitable for standard applications in the water and wastewater industry

Device properties
- Up to 30 % less sensor weight
- Nominal diameter: DN 25 to 2400 (1 to 90")
- Maximum reduced installation length to DVGW/ISO
- Transmitter housing made of durable polycarbonate or aluminum
- WLAN access
- Integrated data logger: measured values monitoring

Your benefits

- Reduced installation costs – flexible mounting by one-of-a-kind lap-joint flange concept (DN < 350/14")
- Energy-saving flow measurement – no pressure loss due to cross-section constriction
- Maintenance-free – no moving parts
- Safe operation – no need to open the device due to display with touch control, background lighting
- Time-saving local operation without additional software and hardware – integrated web server
- Integrated verification – Heartbeat Technology

Endress+Hauser
People for Process Automation

Table of contents

About this document

Symbols used

Electrical symbols

Symbol	Meaning
⎓	Direct current
∼	Alternating current
≂	Direct current and alternating current
⏚	**Ground connection** A grounded terminal which, as far as the operator is concerned, is grounded via a grounding system.
⏦	**Protective Earth (PE)** A terminal which must be connected to ground prior to establishing any other connections. The ground terminals are situated inside and outside the device: ▪ Inner ground terminal: Connects the protectiv earth to the mains supply. ▪ Outer ground terminal: Connects the device to the plant grounding system.

Communication symbols

Symbol	Meaning
	Wireless Local Area Network (WLAN) Communication via a wireless, local network.
	Bluetooth Wireless data transmission between devices over a short distance.
	LED Light emitting diode is off.
	LED Light emitting diode is on.
	LED Light emitting diode is flashing.

Symbols for certain types of information

Symbol	Meaning
	Permitted Procedures, processes or actions that are permitted.
	Preferred Procedures, processes or actions that are preferred.
	Forbidden Procedures, processes or actions that are forbidden.
	Tip Indicates additional information.
	Reference to documentation.
	Reference to page.
	Reference to graphic.
	Visual inspection.

Symbols in graphics

Symbol	Meaning
1, 2, 3, ...	Item numbers
1., 2., 3., ...	Series of steps
A, B, C, ...	Views
A-A, B-B, C-C, ...	Sections
EX	Hazardous area
~~EX~~	Safe area (non-hazardous area)
≋➡	Flow direction

Function and system design

Measuring principle

Following *Faraday's law of magnetic induction*, a voltage is induced in a conductor moving through a magnetic field.

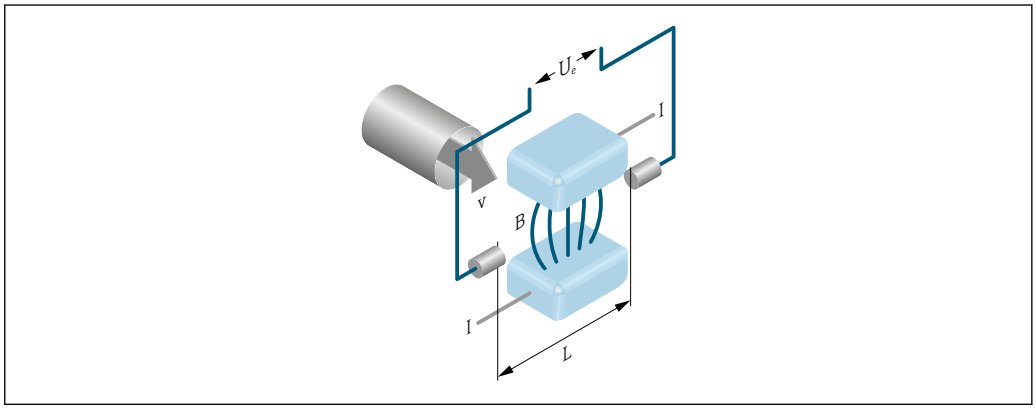

A0028962

Ue *Induced voltage*
B *Magnetic induction (magnetic field)*
L *Electrode spacing*
I *Current*
v *Flow velocity*

In the electromagnetic measuring principle, the flowing medium is the moving conductor. The voltage induced (U_e) is proportional to the flow velocity (v) and is supplied to the amplifier by means of two measuring electrodes. The flow volume (Q) is calculated via the pipe cross-section (A). The DC magnetic field is created through a switched direct current of alternating polarity.

Formulae for calculation

- Induced voltage $U_e = B \cdot L \cdot v$
- Volume flow $Q = A \cdot v$

Measuring system

The device consists of a transmitter and a sensor.

Two device versions are available:
- Compact version – transmitter and sensor form a mechanical unit.
- Remote version - transmitter and sensor are mounted in separate locations.

Transmitter

Promag 400 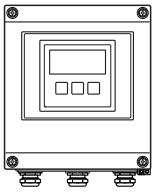 A0017117	Device versions and materials ▪ Compact version: compact housing – Polycarbonate plastic – Aluminum, AlSi10Mg, coated ▪ Remote version: wall-mount housing – Polycarbonate plastic – Aluminum, AlSi10Mg, coated Configuration: ▪ External operation via four-line, illuminated local display with touch control and guided menus ("Make-it-run" wizards) for applications ▪ Via operating tools (e.g. FieldCare) ▪ Via Web browser (e.g. Microsoft Internet Explorer) ▪ Also for device version with EtherNet/IP output: – Via Add-on Profile Level 3 for automation system from Rockwell Automation – Via Electronic Data Sheet (EDS) ▪ Also for device version with PROFIBUS DP output: Via PDM driver for Siemens automation system

Sensor

Promag L *Lap joint flange, lap joint flange, stamped plate: DN 25 to 300 (1 to 12")* 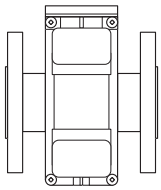 A0017040 *Fixed flange: DN 350 to 2400 (14 to 90")* 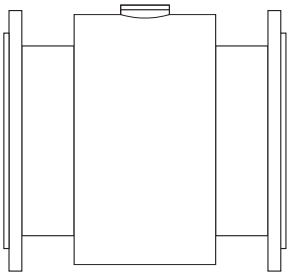 A0017041	▪ Nominal diameter range: DN 25 to 2400 (1 to 90") ▪ Materials: – Sensor housing: aluminum, AlSi10Mg, coated; carbon steel with protective varnish – Sensor connection housing: aluminum, AlSi10Mg, coated Sensor connection housing polycarbonate for DN 350 to 2 400 mm (13.8 to 94.5 in) for IP68 option – Measuring tubes: DN 25 to 300 (1 to 12"): stainless steel, 1.4301/1.4306/304L DN 350 to 1200 (14 to 48"): stainless steel, 1.4301/1.4307/304 DN 1350 to 2400 (54 to 90"): stainless steel, 1.4301/1.4307 – Liner: hard rubber, polyurethane, PTFE – Electrodes: stainless steel, 1.4435 (316L); Alloy C22, 2.4602 (UNS N06022) – Process connections: Stainless steel, 1.4301/1.4306/1.4404//1.4571/F316L Carbon steel, A105/A181/A515(70)/FE410WB/P250GH/P235 GH/P265GH/S235JRG2/S235JR+N/S275JR – Seals: as per DIN EN 1514-1 Form IBC – Ground disks: stainless steel, 1.4435 (316L); Alloy C22, 2.4602 (UNS N06022)

Equipment architecture

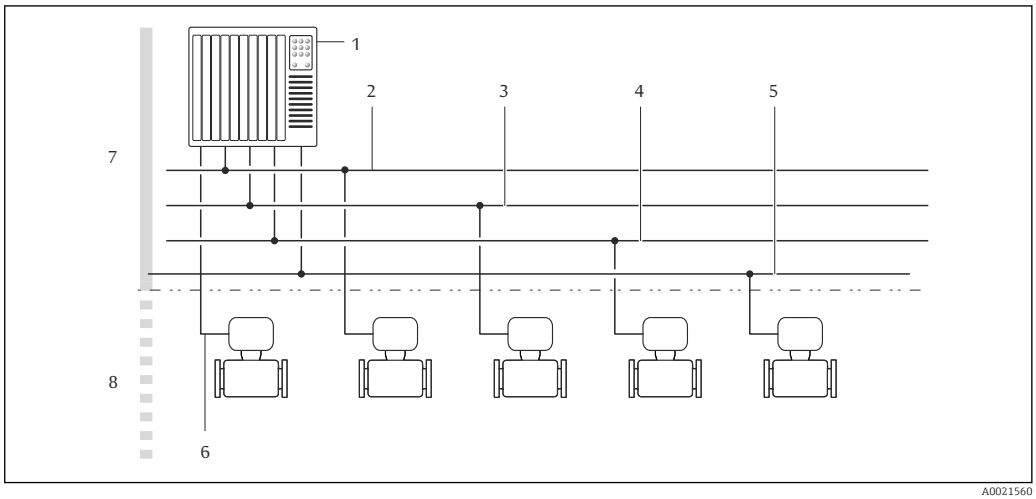

1 Possibilities for integrating measuring devices into a system

1 *Control system (e.g. PLC)*
2 *EtherNet/IP*
3 *PROFIBUS DP*
4 *Modbus RS485*
5 *4-20 mA HART, pulse/frequency/switch output*
6 *Non-hazardous area*
7 *Non-hazardous area and Zone 2/Div. 2*

Safety

IT security

We only provide a warranty if the device is installed and used as described in the Operating Instructions. The device is equipped with security mechanisms to protect it against any inadvertent changes to the device settings.

IT security measures in line with operators' security standards and designed to provide additional protection for the device and device data transfer must be implemented by the operators themselves.

Device-specific IT security

The device offers a range of specific functions to support protective measures on the operator's side. These functions can be configured by the user and guarantee greater in-operation safety if used correctly. An overview of the most important functions is provided in the following section.

Protecting access via hardware write protection

Write access to the device parameters via the local display or operating tool (e.g. FieldCare, DeviceCare) can be disabled via a write protection switch (DIP switch on the motherboard). When hardware write protection is enabled, only read access to the parameters is possible.

Hardware write protection is disabled when the device is delivered.

Protecting access via a password

Different passwords are available to protect write access to the device parameters or access to the device via the WLAN interface.

- User-specific access code
  Protect write access to the device parameters via the local display, Web browser or operating tool (e.g. FieldCare, DeviceCare). Access authorization is clearly regulated through the use of a user-specific access code.
- WLAN passphrase
  The network key protects a connection between an operating unit (e.g. notebook or tablet) and the device via the WLAN interface which can be ordered as an option.

User-specific access code

Write access to the device parameters via the local display or operating tool (e.g. FieldCare, DeviceCare) can be protected by the modifiable, user-specific access code.

WLAN passphrase

A connection between an operating unit (e.g. notebook or tablet) and the device via the WLAN interface which can be ordered as an option is protected by the network key. The WLAN authentication of the network key complies with the IEEE 802.11 standard.

When the device is delivered, the network key is pre-defined depending on the device. It can be changed via the **WLAN settings** submenu in the **WLAN passphrase** parameter.

General notes on the use of passwords

- The access code and network key supplied with the device should be changed during commissioning.
- Follow the general rules for generating a secure password when defining and managing the access code or network key.
- The user is responsible for the management and careful handling of the access code and network key.

Access via fieldbus

When communicating via fieldbus, access to the device parameters can be restricted to *"Read only"* access. The option can be changed in the **Fieldbus writing access** parameter.

This does not affect cyclic measured value transmission to the higher-order system, which is always guaranteed.

For detailed information, see the "Description of Device Parameters" document pertaining to the device → 🗎 89

Access via Web server

The device can be operated and configured via a Web browser with the integrated Web server. The connection is via the service interface (CDI-RJ45) or the WLAN interface. For device versions with the EtherNet/IP and PROFINET communication protocols, the connection can also be established via the terminal connection for signal transmission with EtherNet/IP or PROFINET (RJ45 connector).

The Web server is enabled when the device is delivered. The Web server can be disabled if necessary (e.g. after commissioning) via the **Web server functionality** parameter.

The device and status information can be hidden on the login page. This prevents unauthorized access to the information.

For detailed information, see the "Description of Device Parameters" document pertaining to the device → 🗎 89

Input

Measured variable

Direct measured variables

- Volume flow (proportional to induced voltage)
- Electrical conductivity

Calculated measured variables

Mass flow

Measuring range

Typically v = 0.01 to 10 m/s (0.03 to 33 ft/s) with the specified accuracy

Electrical conductivity: ≥ 5 µS/cm for liquids in general

Flow characteristic values in SI units

Nominal diameter		Recommended flow	Factory settings		
		min./max. full scale value (v ~ 0.3/10 m/s)	Full scale value current output (v ~ 2.5 m/s)	Pulse value (~ 2 pulse/s)	Low flow cut off (v ~ 0.04 m/s)
[mm]	[in]	[m^3/h]	[m^3/h]	[m^3]	[m^3/h]
25	1	9 to 300 dm^3/min	75 dm^3/min	0.5 dm^3	1 dm^3/min
32	–	15 to 500 dm^3/min	125 dm^3/min	1.0 dm^3	2 dm^3/min
40	1 ½	25 to 700 dm^3/min	200 dm^3/min	1.5 dm^3	3 dm^3/min
50	2	35 to 1 100 dm^3/min	300 dm^3/min	2.5 dm^3	5 dm^3/min
65	–	60 to 2 000 dm^3/min	500 dm^3/min	5 dm^3	8 dm^3/min
80	3	90 to 3 000 dm^3/min	750 dm^3/min	5 dm^3	12 dm^3/min
100	4	145 to 4 700 dm^3/min	1 200 dm^3/min	10 dm^3	20 dm^3/min
125	–	220 to 7 500 dm^3/min	1 850 dm^3/min	15 dm^3	30 dm^3/min
150	6	20 to 600	150	0.025	2.5
200	8	35 to 1 100	300	0.05	5
250	10	55 to 1 700	500	0.05	7.5
300	12	80 to 2 400	750	0.1	10
350	14	110 to 3 300	1 000	0.1	15
375	15	140 to 4 200	1 200	0.15	20
400	16	140 to 4 200	1 200	0.15	20
450	18	180 to 5 400	1 500	0.25	25
500	20	220 to 6 600	2 000	0.25	30
600	24	310 to 9 600	2 500	0.3	40
700	28	420 to 13 500	3 500	0.5	50
750	30	480 to 15 000	4 000	0.5	60
800	32	550 to 18 000	4 500	0.75	75
900	36	690 to 22 500	6 000	0.75	100
1 000	40	850 to 28 000	7 000	1	125
–	42	950 to 30 000	8 000	1	125
1 200	48	1 250 to 40 000	10 000	1.5	150
–	54	1 550 to 50 000	13 000	1.5	200
1 400	–	1 700 to 55 000	14 000	2	225
–	60	1 950 to 60 000	16 000	2	250
1 600	–	2 200 to 70 000	18 000	2.5	300
–	66	2 500 to 80 000	20 500	2.5	325
1 800	72	2 850 to 90 000	23 000	3	350
–	78	3 300 to 100 000	28 500	3.5	450
2 000	–	3 400 to 110 000	28 500	3.5	450
–	84	3 700 to 125 000	31 000	4.5	500
2 200	–	4 100 to 136 000	34 000	4.5	540
–	90	4 300 to 143 000	36 000	5	570
2 400	–	4 800 to 162 000	40 000	5.5	650

Flow characteristic values in US units

Nominal diameter		Recommended flow	Factory settings		
		min./max. full scale value (v ~ 0.3/10 m/s)	Full scale value current output (v ~ 2.5 m/s)	Pulse value (~ 2 pulse/s)	Low flow cut off (v ~ 0.04 m/s)
[in]	[mm]	[gal/min]	[gal/min]	[gal]	[gal/min]
1	25	2.5 to 80	18	0.2	0.25
1 ½	40	7 to 190	50	0.5	0.75
2	50	10 to 300	75	0.5	1.25
–	65	16 to 500	130	1	2
3	80	24 to 800	200	2	2.5
4	100	40 to 1250	300	2	4
8	200	155 to 4850	1200	10	15
10	250	250 to 7500	1500	15	30
12	300	350 to 10600	2400	25	45
14	350	500 to 15000	3600	30	60
15	375	600 to 19000	4800	50	60
16	400	600 to 19000	4800	50	60
18	450	800 to 24000	6000	50	90
20	500	1000 to 30000	7500	75	120
24	600	1400 to 44000	10500	100	180
28	700	1900 to 60000	13500	125	210
30	750	2150 to 67000	16500	150	270
32	800	2450 to 80000	19500	200	300
36	900	3100 to 100000	24000	225	360
40	1000	3800 to 125000	30000	250	480
42	–	4200 to 135000	33000	250	600
48	1200	5500 to 175000	42000	400	600
54	–	9 to 300 Mgal/d	75 Mgal/d	0.0005 Mgal/d	1.3 Mgal/d
–	1400	10 to 340 Mgal/d	85 Mgal/d	0.0005 Mgal/d	1.3 Mgal/d
60	–	12 to 380 Mgal/d	95 Mgal/d	0.0005 Mgal/d	1.3 Mgal/d
–	1600	13 to 450 Mgal/d	110 Mgal/d	0.0008 Mgal/d	1.7 Mgal/d
66	–	14 to 500 Mgal/d	120 Mgal/d	0.0008 Mgal/d	2.2 Mgal/d
72	1800	16 to 570 Mgal/d	140 Mgal/d	0.0008 Mgal/d	2.6 Mgal/d
78	–	18 to 650 Mgal/d	175 Mgal/d	0.0010 Mgal/d	3.0 Mgal/d
–	2000	20 to 700 Mgal/d	175 Mgal/d	0.0010 Mgal/d	2.9 Mgal/d
84	–	24 to 800 Mgal/d	190 Mgal/d	0.0011 Mgal/d	3.2 Mgal/d
–	2200	26 to 870 Mgal/d	210 Mgal/d	0.0012 Mgal/d	3.4 Mgal/d
90	–	27 to 910 Mgal/d	220 Mgal/d	0.0013 Mgal/d	3.6 Mgal/d
–	2400	31 to 1030 Mgal/d	245 Mgal/d	0.0014 Mgal/d	4.1 Mgal/d

To calculate the measuring range, use the *Applicator* sizing tool → 🗎 87

Recommended measuring range

"Flow limit" section → 📄 42

Operable flow range

Over 1000 : 1

Input signal

External measured values

Various pressure transmitters and temperature measuring devices can be ordered from Endress +Hauser: see "Accessories" section → 📄 88

It is recommended to read in external measured values to calculate the following measured variables: Corrected volume flow

HART protocol

The measured values are written from the automation system to the measuring device via the HART protocol. The pressure transmitter must support the following protocol-specific functions:
- HART protocol
- Burst mode

Digital communication

The measured values can be written from the automation system to the measuring via:
- PROFIBUS DP
- Modbus RS485
- EtherNet/IP

Status input

Maximum input values	▪ DC 30 V ▪ 6 mA
Response time	Adjustable: 5 to 200 ms
Input signal level	▪ Low signal: DC −3 to +5 V ▪ High signal: DC 12 to 30 V
Assignable functions	▪ Off ▪ Reset totalizers 1-3 separately ▪ Reset all totalizers ▪ Flow override

Output

Output signal

Current output

Current output	Can be set as: ▪ 4-20 mA NAMUR ▪ 4-20 mA US ▪ 4-20 mA HART ▪ 0-20 mA
Maximum output values	▪ DC 24 V (no flow) ▪ 22.5 mA
Load	0 to 700 Ω
Resolution	0.5 µA
Damping	Adjustable: 0.07 to 999 s
Assignable measured variables	▪ Volume flow ▪ Mass flow ▪ Flow velocity ▪ Conductivity ▪ Electronic temperature

Pulse/frequency/switch output

Function	▪ With the order code for "Output; Input", option **H**: output 2 can be set as a pulse or frequency output ▪ With the order code for "Output; Input", option **I**: output 2 and 3 can be set as a pulse, frequency or switch output
Version	Passive, open collector
Maximum input values	▪ DC 30 V ▪ 250 mA
Voltage drop	For 25 mA: ≤ DC 2 V
Pulse output	
Pulse width	Adjustable: 0.05 to 2 000 ms
Maximum pulse rate	10 000 Impulse/s
Pulse value	Adjustable
Assignable measured variables	▪ Volume flow ▪ Mass flow
Frequency output	
Output frequency	Adjustable: 0 to 12 500 Hz
Damping	Adjustable: 0 to 999 s
Pulse/pause ratio	1:1
Assignable measured variables	▪ Volume flow ▪ Mass flow ▪ Conductivity ▪ Flow velocity ▪ Electronic temperature
Switch output	
Switching behavior	Binary, conductive or non-conductive
Switching delay	Adjustable: 0 to 100 s
Number of switching cycles	Unlimited
Assignable functions	▪ Off ▪ On ▪ Diagnostic behavior ▪ Limit value: – Off – Volume flow – Mass flow – Conductivity – Flow velocity – Totalizer 1-3 – Electronic temperature ▪ Flow direction monitoring ▪ Status – Empty pipe detection – Low flow cut off

PROFIBUS DP

Signal encoding	NRZ code
Data transfer	9.6 kBaud...12 MBaud

Modbus RS485

Physical interface	In accordance with EIA/TIA-485-A standard
Terminating resistor	Integrated, can be activated via DIP switch on the transmitter electronics module

EtherNet/IP

Standards	In accordance with IEEE 802.3

Signal on alarm

Depending on the interface, failure information is displayed as follows:

Current output 4 to 20 mA

4 to 20 mA

Failure mode	Choose from: ▪ 4 to 20 mA in accordance with NAMUR recommendation NE 43 ▪ 4 to 20 mA in accordance with US ▪ Min. value: 3.59 mA ▪ Max. value: 22.5 mA ▪ Freely definable value between: 3.59 to 22.5 mA ▪ Actual value ▪ Last valid value

0 to 20 mA

Failure mode	Choose from: ▪ Maximum alarm: 22 mA ▪ Freely definable value between: 0 to 22.5 mA

HART current output

Device diagnostics	Device condition can be read out via HART Command 48

Pulse/frequency/switch output

Pulse output	
Failure mode	Choose from: ▪ Actual value ▪ No pulses
Frequency output	
Failure mode	Choose from: ▪ Actual value ▪ 0 Hz ▪ Defined value: 0 to 12 500 Hz
Switch output	
Failure mode	Choose from: ▪ Current status ▪ Open ▪ Closed

PROFIBUS DP

Status and alarm messages	Diagnostics in accordance with PROFIBUS PA Profile 3.02

Modbus RS485

Failure mode	Choose from: ▪ NaN value instead of current value ▪ Last valid value

EtherNet/IP

Device diagnostics	Device condition can be read out in Input Assembly

Local display

Plain text display	With information on cause and remedial measures
Backlight	Red backlighting indicates a device error.

Status signal as per NAMUR recommendation NE 107

Interface/protocol

- Via digital communication:
  - HART protocol
  - PROFIBUS DP
  - Modbus RS485
  - EtherNet/IP
- Via service interface
  - CDI-RJ45 service interface
  - WLAN interface

Plain text display	With information on cause and remedial measures

Additional information on remote operation → 77

Web server

Plain text display	With information on cause and remedial measures

Light emitting diodes (LED)

Status information	Status indicated by various light emitting diodes The following information is displayed depending on the device version: ▪ Supply voltage active ▪ Data transmission active ▪ Device alarm/error has occurred ▪ EtherNet/IP network available ▪ EtherNet/IP connection established

Low flow cut off

The switch points for low flow cut off are user-selectable.

Galvanic isolation

The following connections are galvanically isolated from each other:
- Inputs
- Outputs
- Power supply

Protocol-specific data

HART

Manufacturer ID	0x11
Device type ID	0x69
HART protocol revision	7
Device description files (DTM, DD)	Information and files under: www.endress.com
HART load	Min. 250 Ω
Dynamic variables	Read out the dynamic variables: HART command 3 The measured variables can be freely assigned to the dynamic variables. **Measured variables for PV (primary dynamic variable)** ▪ Off ▪ Volume flow ▪ Mass flow ▪ Conductivity ▪ Flow velocity ▪ Electronic temperature **Measured variables for SV, TV, QV (secondary, tertiary and quaternary dynamic variable)** ▪ Volume flow ▪ Mass flow ▪ Conductivity ▪ Flow velocity ▪ Electronic temperature ▪ Totalizer 1 ▪ Totalizer 2 ▪ Totalizer 3
Device variables	Read out the device variables: HART command 9 The device variables are permanently assigned. A maximum of 8 device variables can be transmitted: ▪ 0 = volume flow ▪ 1 = mass flow ▪ 2 = conductivity ▪ 3 = flow velocity ▪ 4 = electronic temperature ▪ 5 = totalizer 1 ▪ 6 = totalizer 2 ▪ 7 = totalizer 3

PROFIBUS DP

Manufacturer ID	0x11
Ident number	0x1562
Profile version	3.02
Device description files (GSD, DTM, DD)	Information and files under: ▪ www.endress.com ▪ www.profibus.org
Output values (from measuring device to automation system)	**Analog input 1 to 4** ▪ Mass flow ▪ Volume flow ▪ Flow velocity ▪ Conductivity ▪ Electronic temperature **Digital input 1 to 2** ▪ Empty pipe detection ▪ Low flow cut off ▪ Verification status **Totalizer 1 to 3** ▪ Mass flow ▪ Volume flow

Input values (from automation system to measuring device)	**Analog output 1 (fixed assignment)** External density **Digital output 1 to 2 (fixed assignment)** ▪ Digital output 1: switch positive zero return on/off ▪ Digital output 2: start verification **Totalizer 1 to 3** ▪ Totalize ▪ Reset and hold ▪ Preset and hold ▪ Stop ▪ Operating mode configuration: – Net flow total – Forward flow total – Reverse flow total
Supported functions	▪ Identification & Maintenance Simplest device identification on the part of the control system and nameplate ▪ PROFIBUS upload/download Reading and writing parameters is up to ten times faster with PROFIBUS upload/download ▪ Condensed status Simplest and self-explanatory diagnostic information by categorizing diagnostic messages that occur
Configuration of the device address	▪ DIP switches on the I/O electronics module ▪ Via operating tools (e.g. FieldCare)

Modbus RS485

Protocol	Modbus Applications Protocol Specification V1.1
Device type	Slave
Slave address range	1 to 247
Broadcast address range	0
Function codes	▪ 03: Read holding register ▪ 04: Read input register ▪ 06: Write single registers ▪ 08: Diagnostics ▪ 16: Write multiple registers ▪ 23: Read/write multiple registers
Broadcast messages	Supported by the following function codes: ▪ 06: Write single registers ▪ 16: Write multiple registers ▪ 23: Read/write multiple registers
Supported baud rate	▪ 1 200 BAUD ▪ 2 400 BAUD ▪ 4 800 BAUD ▪ 9 600 BAUD ▪ 19 200 BAUD ▪ 38 400 BAUD ▪ 57 600 BAUD ▪ 115 200 BAUD
Data transfer mode	▪ ASCII ▪ RTU
Data access	Each device parameter can be accessed via Modbus RS485. For Modbus register information

EtherNet/IP

Protocol	▪ The CIP Networks Library Volume 1: Common Industrial Protocol ▪ The CIP Networks Library Volume 2: EtherNet/IP Adaptation of CIP		
Communication type	▪ 10Base-T ▪ 100Base-TX		
Device profile	Generic device (product type: 0x2B)		
Manufacturer ID	0x49E		
Device type ID	0x1067		
Baud rates	Automatic $^{10}/_{100}$ Mbit with half-duplex and full-duplex detection		
Polarity	Auto-polarity for automatic correction of crossed TxD and RxD pairs		
Supported CIP connections	Max. 3 connections		
Explicit connections	Max. 6 connections		
I/O connections	Max. 6 connections (scanner)		
Configuration options for measuring device	▪ DIP switches on the electronics module for IP addressing ▪ Manufacturer-specific software (FieldCare) ▪ Custom Add-on Profile for Rockwell Automation control systems ▪ Web browser ▪ Electronic Data Sheet (EDS) integrated in the measuring device		
Configuration of the EtherNet interface	▪ Speed: 10 MBit, 100 MBit, auto (factory setting) ▪ Duplex: half-duplex, full-duplex, auto (factory setting)		
Configuration of the device address	▪ DIP switches on the electronics module for IP addressing (last octet) ▪ DHCP ▪ Manufacturer-specific software (FieldCare) ▪ Custom Add-on Profile for Rockwell Automation control systems ▪ Web browser ▪ EtherNet/IP tools, e.g. RSLinx (Rockwell Automation)		
Device Level Ring (DLR)	No		
Fix Input			
RPI	5 ms to 10 s (factory setting: 20 ms)		
Exclusive Owner Multicast		Instance	Size [byte]
	Instance configuration:	0x68	398
	O → T configuration:	0x66	56
	T → O configuration:	0x64	32
Exclusive Owner Multicast		Instance	Size [byte]
	Instance configuration:	0x69	-
	O → T configuration:	0x66	56
	T → O configuration:	0x64	32
Input only Multicast		Instance	Size [byte]
	Instance configuration:	0x68	398
	O → T configuration:	0xC7	-
	T → O configuration:	0x64	32
Input only Multicast		Instance	Size [byte]
	Instance configuration:	0x69	-
	O → T configuration:	0xC7	-
	T → O configuration:	0x64	32

Input Assembly	▪ Current device diagnostics ▪ Volume flow ▪ Mass flow ▪ Conductivity ▪ Totalizer 1 ▪ Totalizer 2 ▪ Totalizer 3		
Configurable Input			
RPI	5 ms to 10 s (factory setting: 20 ms)		
Exclusive Owner Multicast		Instance	Size [byte]
	Instance configuration:	0x68	398
	O → T configuration:	0x66	56
	T → O configuration:	0x65	88
Exclusive Owner Multicast		Instance	Size [byte]
	Instance configuration:	0x69	-
	O → T configuration:	0x66	56
	T → O configuration:	0x65	88
Input only Multicast		Instance	Size [byte]
	Instance configuration:	0x68	398
	O → T configuration:	0xC7	-
	T → O configuration:	0x65	88
Input only Multicast		Instance	Size [byte]
	Instance configuration:	0x69	-
	O → T configuration:	0xC7	-
	T → O configuration:	0x65	88
Configurable Input Assembly	▪ Volume flow ▪ Mass flow ▪ Electronic temperature ▪ Conductivity ▪ Totalizer 1 to 3 ▪ Flow velocity ▪ Volume flow unit ▪ Mass flow unit ▪ Temperature unit ▪ Conductivity unit ▪ Unit totalizer 1-3 ▪ Flow velocity unit ▪ Verification result ▪ Verification status ℹ The range of options increases if the measuring device has one or more application packages.		
Fix Output			
Output Assembly	▪ Activation of reset totalizers 1-3 ▪ Activation of reference density compensation ▪ Reset totalizers 1-3 ▪ External density ▪ Density unit ▪ Activation verification ▪ Start verification		

Configuration	
Configuration Assembly	Only the most common configurations are listed below. ▪ Software write protection ▪ Mass flow unit ▪ Mass unit ▪ Volume flow unit ▪ Volume unit ▪ Density unit ▪ Conductivity ▪ Temperature unit ▪ Totalizer 1-3: – Assignment – Unit – Operating mode – Failure mode ▪ Alarm delay

Power supply

Terminal assignment

Transmitter: 0-20 mA/4-20 mA HART

The sensor can be ordered with terminals.

Connection methods available		Possible options for order code "Electrical connection"
Outputs	**Power supply**	
terminals	terminals	▪ Option **A**: coupling M20x1 ▪ Option **B**: thread M20x1 ▪ Option **C**: thread G ½" ▪ Option **D**: thread NPT ½"

Supply voltage

Order code "Power supply"	Terminal numbers	terminal voltage		Frequency range
Option **L** (wide range power unit)	1 (L+/L), 2 (L-/N)	DC 24 V	±25%	–
		AC 24 V	±25%	50/60 Hz, ±4 Hz
		AC 100 to 240 V	−15 to +10%	50/60 Hz, ±4 Hz

Signal transmission 0-20 mA/4-20 mA HART and additional outputs and inputs

Order code for "Output" and "Input"	Terminal numbers							
	Output 1		Output 2		Output 3		Input	
	26 (+)	27 (-)	24 (+)	25 (-)	22 (+)	23 (-)	20 (+)	21 (-)
Option **H**	▪ 4-20 mA HART (active) ▪ 0-20 mA (active)		Pulse/frequency output (passive)		Switch output (passive)		-	
Option **I**	▪ 4-20 mA HART (active) ▪ 0-20 mA (active)		Pulse/frequency/ switch output (passive)		Pulse/frequency/ switch output (passive)		Status input	

Transmitter: PROFIBUS DP

The sensor can be ordered with terminals.

Connection methods available		Possible options for order code "Electrical connection"
Outputs	Power supply	
terminals	terminals	▪ Option **A**: coupling M20x1 ▪ Option **B**: thread M20x1 ▪ Option **C**: thread G ½" ▪ Option **D**: thread NPT ½"

Supply voltage

Order code "Power supply"	Terminal numbers	terminal voltage		Frequency range
Option **L** (wide range power unit)	1 (L+/L), 2 (L-/N)	DC 24 V	±25%	–
		AC 24 V	±25%	50/60 Hz, ±4 Hz
		AC 100 to 240 V	−15 to +10%	50/60 Hz, ±4 Hz

PROFIBUS DP signal transmission

Order code for "Output" and "Input"	Terminal numbers	
	26 (RxD/TxD-P)	27 (RxD/TxD-N)
Option **L**	B	A
Order code for "Output": Option L: PROFIBUS DP, for use in non-hazardous areas and Zone 2/div. 2		

Transmitter: Modbus RS485

The sensor can be ordered with terminals.

Connection methods available		Possible options for order code "Electrical connection"
Outputs	Power supply	
terminals	terminals	▪ Option **A**: coupling M20x1 ▪ Option **B**: thread M20x1 ▪ Option **C**: thread G ½" ▪ Option **D**: thread NPT ½"

Supply voltage

Order code "Power supply"	Terminal numbers	terminal voltage		Frequency range
Option **L** (wide range power unit)	1 (L+/L), 2 (L-/N)	DC 24 V	±25%	–
		AC 24 V	±25%	50/60 Hz, ±4 Hz
		AC 100 to 240 V	−15 to +10%	50/60 Hz, ±4 Hz

Signal transmission Modbus RS485

Order code for "Output" and "Input"	Terminal numbers	
	26 (+)	27 (-)
Option **M**	B	A

Transmitter: EtherNet/IP

The sensor can be ordered with terminals or a device plug.

Connection methods available		Possible options for order code "Electrical connection"
Outputs	**Power supply**	
terminals	terminals	▪ Option **A**: coupling M20x1 ▪ Option **B**: thread M20x1 ▪ Option **C**: thread G ½" ▪ Option **D**: thread NPT ½"
Device plug	terminals	▪ Option **L**: plug M12x1 + thread NPT ½" ▪ Option **N**: plug M12x1 + coupling M20 ▪ Option **P**: plug M12x1 + thread G ½" ▪ Option **U**: plug M12x1 + thread M20

Supply voltage

Order code "Power supply"	Terminal numbers	terminal voltage		Frequency range
Option **L** (wide range power unit)	1 (L+/L), 2 (L-/N)	DC 24 V	±25%	–
		AC 24 V	±25%	50/60 Hz, ±4 Hz
		AC 100 to 240 V	−15 to +10%	50/60 Hz, ±4 Hz

EtherNet/IP signal transmission

Order code for "Output"	Connection via
Option **N**	EtherNet/IP connector

Remote version

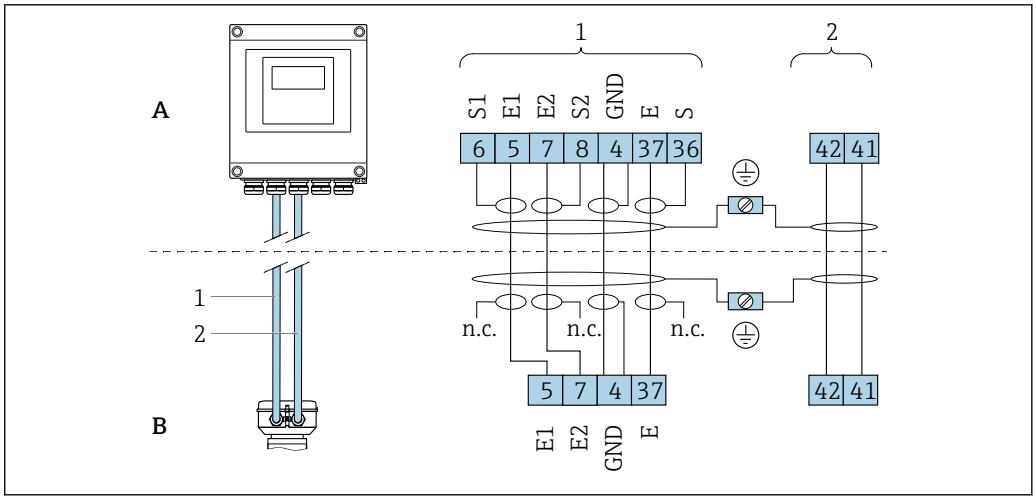

2 *Remote version terminal assignment*

A Transmitter wall-mount housing
B Sensor connection housing
1 Electrode cable
2 Coil current cable
n.c. Not connected, insulated cable shields

Terminal No. and cable colors: 6/5 = brown; 7/8 = white; 4 = green; 36/37 = yellow

Pin assignment, device plug

Order codes for the M12x1 connectors, see the "Order code for electrical connection" column: EtherNet/IP → 21

EtherNet/IP

Device plug for signal transmission (device side)

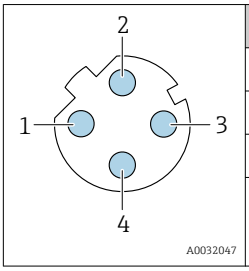

Pin	Assignment		Coding	Plug/socket
1	+	Tx	D	Socket
2	+	Rx		
3	-	Tx		
4	-	Rx		

Recommended plug:
- Binder, series 763, part no. 99 3729 810 04
- Phoenix, part no. 1543223 SACC-M12MSD-4Q
- When using the device in a hazardous location, use a suitably certified plug.

Supply voltage

Transmitter

Order code for "Power supply"	terminal voltage		Frequency range
Option **L**	DC 24 V	±25%	–
	AC 24 V	±25%	50/60 Hz, ±4 Hz
	AC 100 to 240 V	−15 to +10%	50/60 Hz, ±4 Hz

Power consumption

Order code for "Output"	Maximum power consumption
Option **H**: 4-20mA HART, pulse/frequency/switch output, switch output	30 VA/8 W
Option **I**: 4-20mA HART, 2 x pulse/frequency/switch output, status input	30 VA/8 W
Option **L**: PROFIBUS DP	30 VA/8 W
Option **M**: Modbus RS485	30 VA/8 W
Option **N**: EtherNet/IP	30 VA/8 W

Current consumption

Transmitter

Order code for "Power supply"	Maximum Current consumption	Maximum switch-on current
Option **L**: AC 100 to 240 V	145 mA	25 A (< 5 ms)
Option **L**: AC/DC 24 V	350 mA	27 A (< 5 ms)

Power supply failure

- Totalizers stop at the last value measured.
- Configuration is retained in the plug-in memory (HistoROM DAT).
- Error messages (incl. total operated hours) are stored.

Electrical connection

Connecting the transmitter

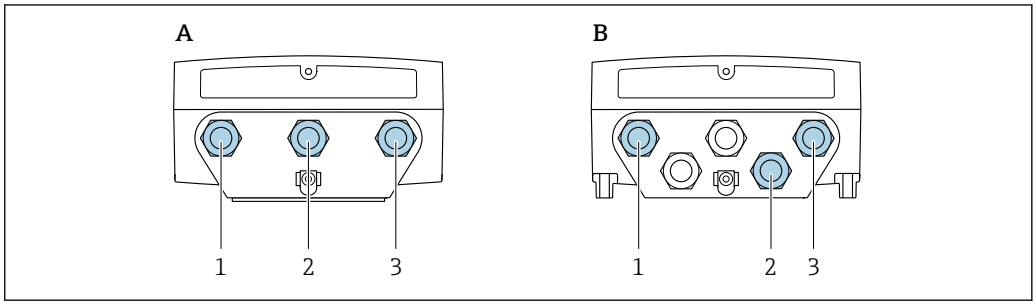

3 Supply voltage and signal transmission connection

A Compact version
B Remote version wall-mount housing
1 Cable entry for supply voltage
2 Cable entry for signal transmission
3 Cable entry for signal transmission

Remote version connection

Connecting cable

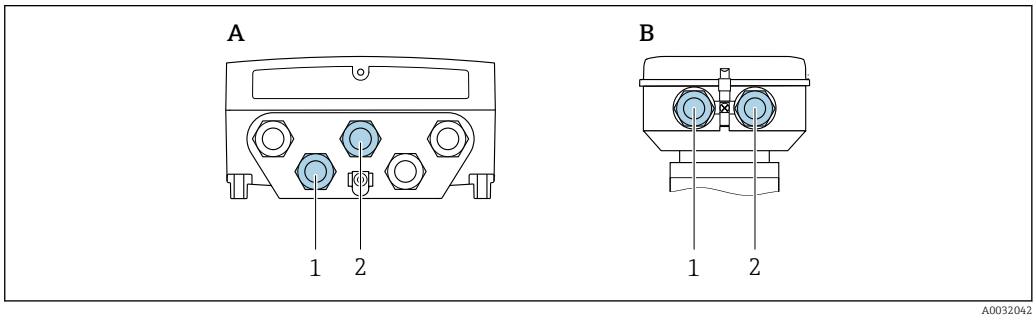

4 Connecting cable connection: electrode and coil current cable

A Transmitter wall-mount housing
B Sensor connection housing
1 Electrode cable
2 Coil current cable

- Fix the cable run or route it in an armored conduit.
  Cable movements can influence the measuring signal especially in the case of low fluid conductivities.
- Route the cable well clear of electrical machines and switching elements.
- Ensure potential equalization between sensor and transmitter .

Connection examples

Current output 4 to 20 mA HART

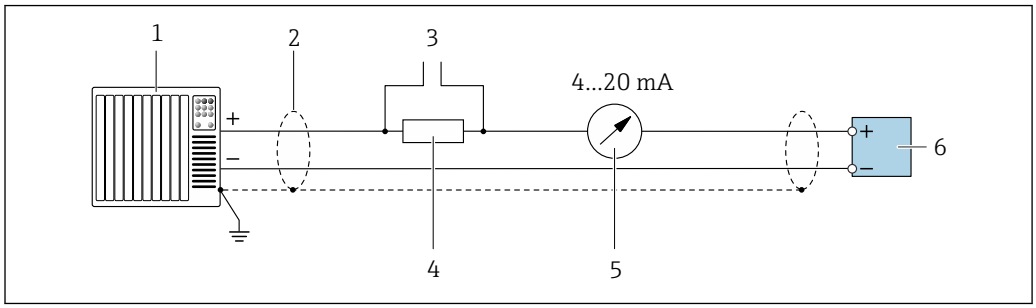

5 Connection example for 4 to 20 mA HART current output (active)

1 *Automation system with current input (e.g. PLC)*
2 *Cable shield: the cable shield must be grounded at both ends to comply with EMC requirements; observe cable specifications → 29*
3 *Connection for HART operating devices → 77*
4 *Resistor for HART communication (≥ 250 Ω): observe maximum load → 11*
5 *Analog display unit: observe maximum load → 11*
6 *Transmitter*

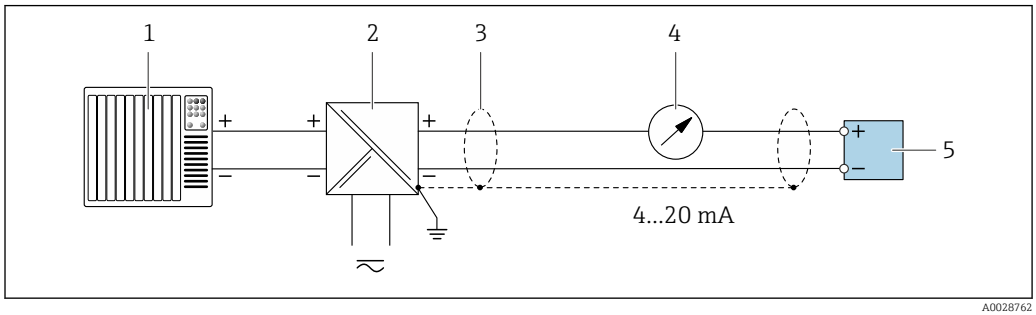

6 Connection example for 4 to 20 mA HART current output (passive)

1 *Automation system with current input (e.g. PLC)*
2 *Power supply*
3 *Cable shield: the cable shield must be grounded at both ends to comply with EMC requirements; observe cable specifications → 29*
4 *Analog display unit: observe maximum load → 11*
5 *Transmitter*

Current output 4-20 mA

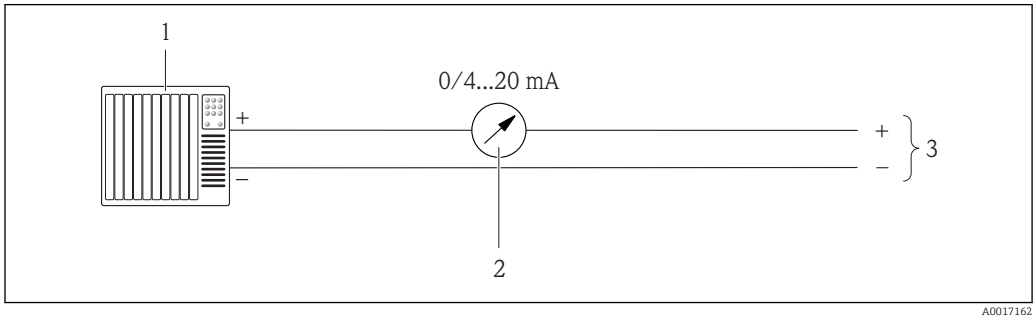

7 Connection example for 0-20 mA current output (active) and 4-20 mA current output (active)

1 *Automation system with current input (e.g. PLC)*
2 *Analog display unit: observe maximum load*
3 *Transmitter*

Pulse/frequency output

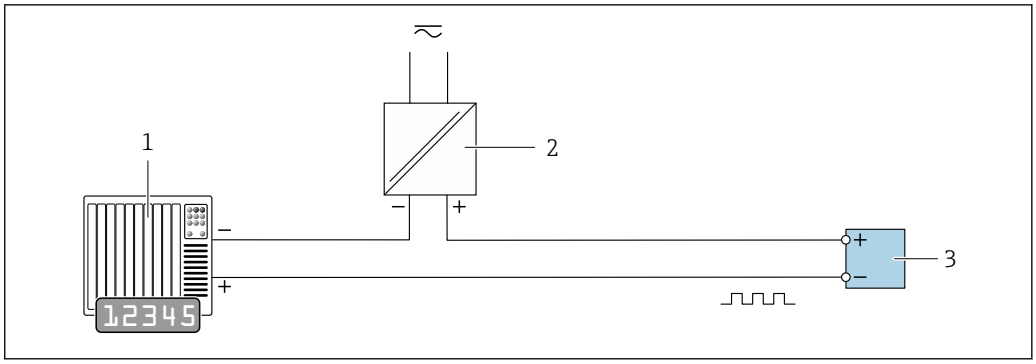

8 Connection example for pulse/frequency output (passive)

1 Automation system with pulse/frequency input (e.g. PLC)
2 Power supply
3 Transmitter: Observe input values → 12

Switch output

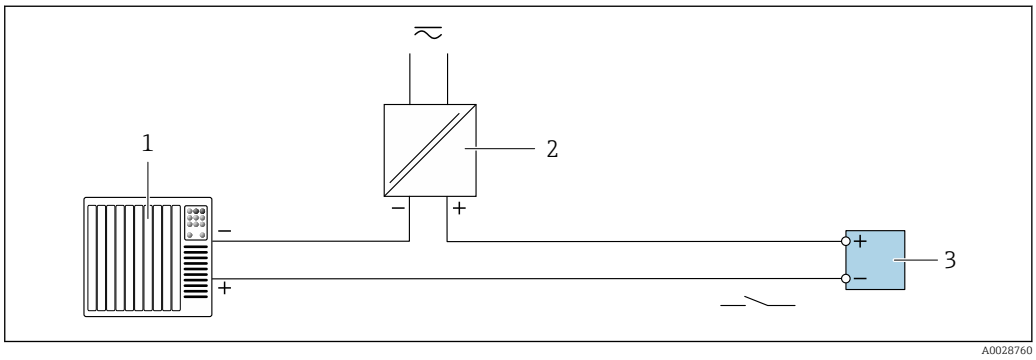

9 Connection example for switch output (passive)

1 Automation system with switch input (e.g. PLC)
2 Power supply
3 Transmitter: Observe input values → 12

PROFIBUS DP

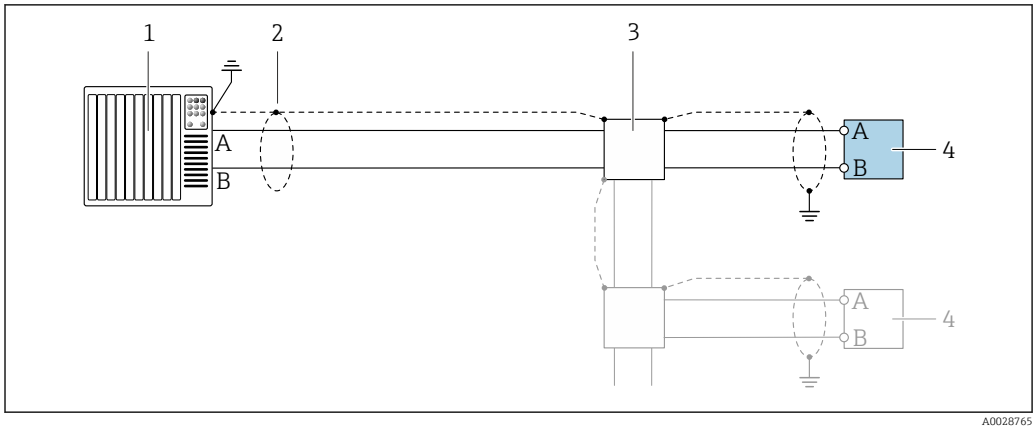

10 Connection example for PROFIBUS DP, non-hazardous area and Zone 2/Div. 2

1 *Control system (e.g. PLC)*
2 *Cable shield: the cable shield must be grounded at both ends to comply with EMC requirements; observe cable specifications*
3 *Transmitter*

If baud rates > 1.5 MBaud an EMC cable entry must be used and the cable shield must continue as far as the terminal wherever possible.

Modbus RS485

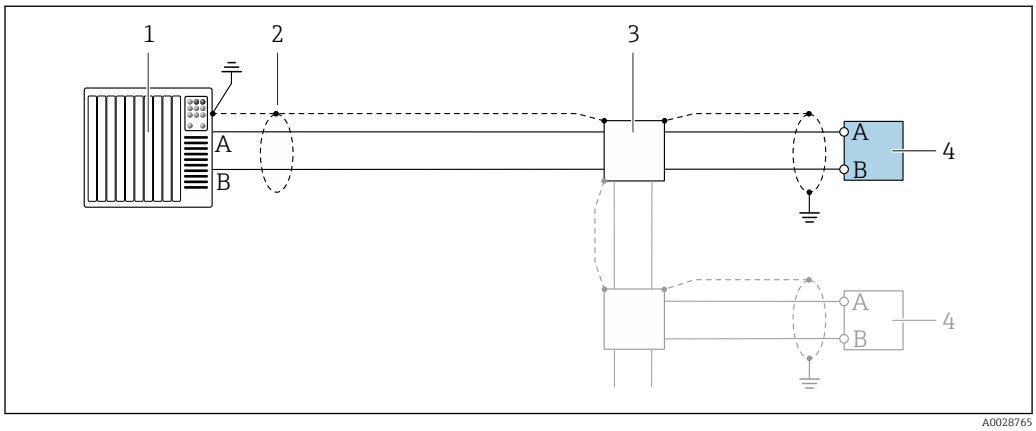

11 Connection example for Modbus RS485, non-hazardous area and Zone 2/Div. 2

1 *Control system (e.g. PLC)*
2 *Cable shield: the cable shield must be grounded at both ends to comply with EMC requirements; observe cable specifications*
3 *Distribution box*
4 *Transmitter*

EtherNet/IP

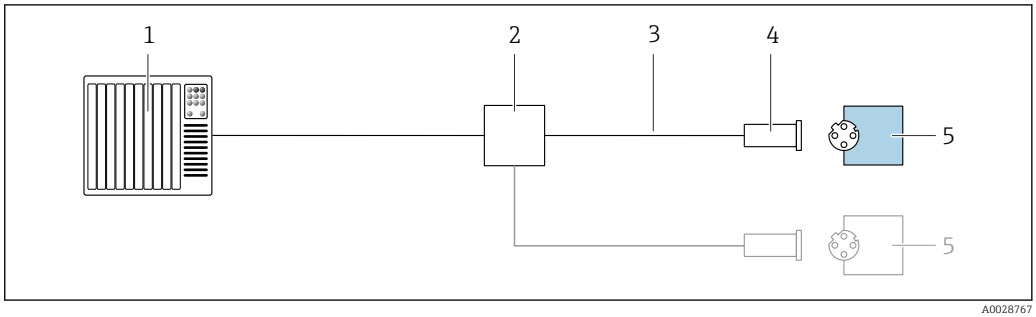

12 Connection example for EtherNet/IP

1 *Control system (e.g. PLC)*
2 *Ethernet switch*
3 *Observe cable specifications*
4 *Device plug*
5 *Transmitter*

Status input

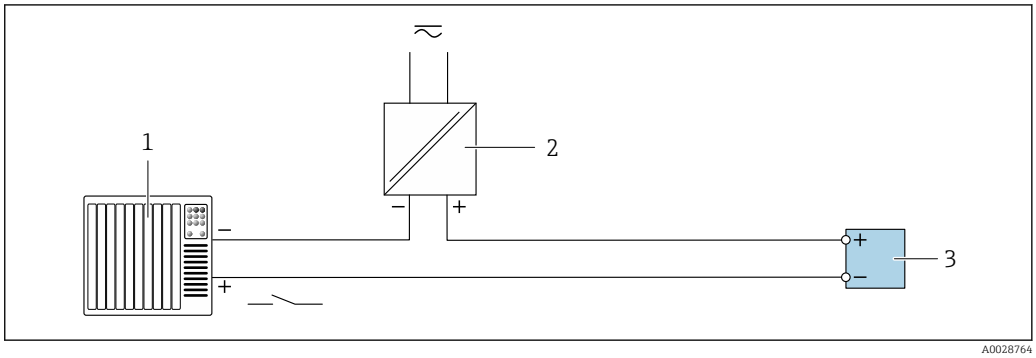

13 Connection example for status input

1 *Automation system with status output (e.g. PLC)*
2 *Power supply*
3 *Transmitter: Observe input values*

Potential equalization

Requirements

Please consider the following to ensure correct measurement:
- Same electrical potential for the medium and sensor
- Remote version: same electrical potential for the sensor and transmitter
- Company-internal grounding concepts
- Pipe material and grounding

Connection example, standard scenario

Metal, grounded pipe

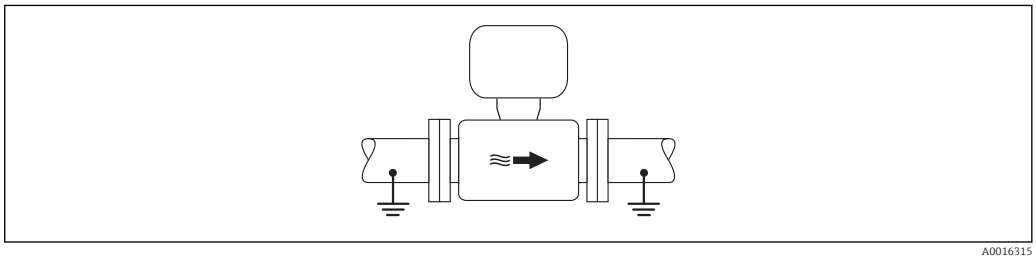

14 Potential equalization via measuring tube

Connection example in special situations

Unlined and ungrounded metal pipe

This connection method also applies in situations where:
- The customary potential equalization is not used
- Equalizing currents are present

Ground cable	Copper wire, at least 6 mm^2 (0.0093 in^2)

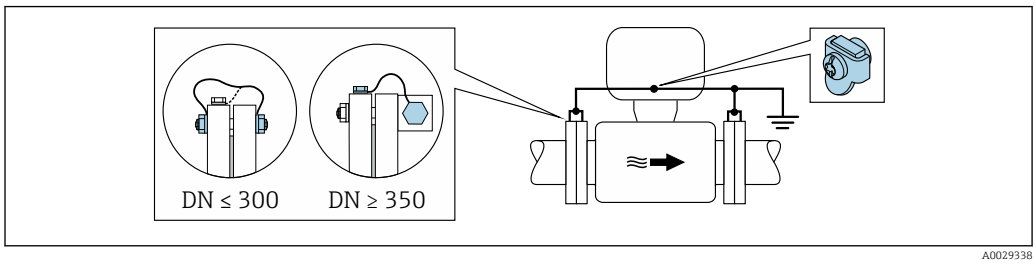

15 *Potential equalization via ground terminal and pipe flanges*

Note the following when installing:
- Connect both sensor flanges to the pipe flange via a ground cable and ground them.
- Connect the connection housing of the transmitter or sensor to ground potential by means of the ground terminal provided for the purpose. To mount the ground cable:
  - If DN ≤ 300 (12"): Mount the ground cable directly on the conductive flange coating of the sensor with the flange screws.
  - If DN ≥ 350 (14"): Mount the ground cable directly on the metal transport bracket.

For remote device versions, the ground terminal in the example always refers to the sensor and **not** to the transmitter.

You can order the necessary ground cable from Endress+Hauser: → 86.

Plastic pipe or pipe with insulating liner

This connection method also applies in situations where:
- The customary potential equalization is not used
- Equalizing currents are present

Ground cable	Copper wire, at least 6 mm^2 (0.0093 in^2)

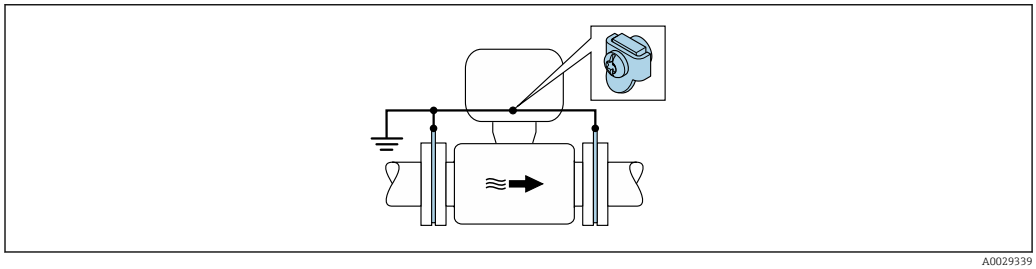

16 *Potential equalization via ground terminal and ground disks*

Note the following when installing:
The ground disks must be connected to the ground terminal via the ground cable and be connected to ground potential.

For remote device versions, the ground terminal in the example always refers to the sensor and **not** to the transmitter.

The ground cable and ground disks can be ordered from Endress+Hauser → 86.

Pipe with a cathodic protection unit

This connection method is only used if the following two conditions are met:
- Metal pipe without liner or pipe with electrically conductive liner
- Cathodic protection is integrated in the personal protection equipment

Ground cable	Copper wire, at least 6 mm² (0.0093 in²)

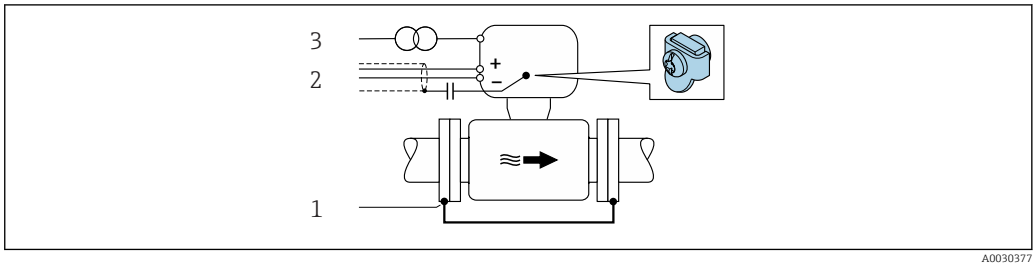

1 *Connection of the two flanges of the pipe via a ground cable*
2 *Signal line shielding via a capacitor*
3 *Measuring device connected to power supply such that it is floating in relation to the protective ground (isolation transformer)*

Note the following when installing:
The sensor is installed in the pipe in a way that provides electrical insulation.

For remote device versions, the ground terminal in the example always refers to the sensor and **not** to the transmitter.

You can order the necessary ground cable from Endress+Hauser: → 86.

terminals

Transmitter
- Supply voltage cable: plug-in spring terminals for wire cross-sections 0.5 to 2.5 mm² (20 to 14 AWG)
- Signal cable: plug-in spring terminals for wire cross-sections 0.5 to 2.5 mm² (20 to 14 AWG)
- Electrode cable: spring terminals for wire cross-sections 0.5 to 2.5 mm² (20 to 14 AWG)
- Coil current cable: spring terminals for wire cross-sections 0.5 to 2.5 mm² (20 to 14 AWG)

Sensor connection housing
Spring terminals for wire cross-sections0.5 to 2.5 mm² (20 to 14 AWG)

Cable entries

Cable entry thread
- M20 x 1.5
- Via adapter:
  - NPT ½"
  - G ½"

Cable gland
- For standard cable: M20 × 1.5 with cable Φ6 to 12 mm (0.24 to 0.47 in)
- For reinforced cable: M20 × 1.5 with cable Φ9.5 to 16 mm (0.37 to 0.63 in)

If metal cable entries are used, use a grounding plate.

Cable specification

Permitted temperature range

- The installation guidelines that apply in the country of installation must be observed.
- The cables must be suitable for the minimum and maximum temperatures to be expected.

Power supply cable

Standard installation cable is sufficient.

Signal cable

Current output 0/4 to 20 mA

Standard installation cable is sufficient.

Current output 4 to 20 mA HART

A shielded cable is recommended. Observe grounding concept of the plant.

Pulse/frequency/switch output

Standard installation cable is sufficient.

Status input

Standard installation cable is sufficient.

PROFIBUS DP

The IEC 61158 standard specifies two types of cable (A and B) for the bus line which can be used for every transmission rate. Cable type A is recommended.

Cable type	A
Characteristic impedance	135 to 165 Ω at a measuring frequency of 3 to 20 MHz
Cable capacitance	< 30 pF/m
Wire cross-section	> 0.34 mm^2 (22 AWG)
Cable type	Twisted pairs
Loop resistance	≤110 Ω/km
Signal damping	Max. 9 dB over the entire length of the cable cross-section
Shield	Copper braided shielding or braided shielding with foil shield. When grounding the cable shield, observe the grounding concept of the plant.

Modbus RS485

The EIA/TIA-485 standard specifies two types of cable (A and B) for the bus line which can be used for every transmission rate. Cable type A is recommended.

Cable type	A
Characteristic impedance	135 to 165 Ω at a measuring frequency of 3 to 20 MHz
Cable capacitance	< 30 pF/m
Wire cross-section	> 0.34 mm^2 (22 AWG)
Cable type	Twisted pairs
Loop resistance	≤110 Ω/km
Signal damping	Max. 9 dB over the entire length of the cable cross-section
Shield	Copper braided shielding or braided shielding with foil shield. When grounding the cable shield, observe the grounding concept of the plant.

EtherNet/IP

The standard ANSI/TIA/EIA-568-B.2 Annex specifies CAT 5 as the minimum category for a cable used for EtherNet/IP. CAT 5e and CAT 6 are recommended.

For more information on planning and installing EtherNet/IP networks, please refer to the "Media Planning and Installation Manual. EtherNet/IP" of ODVA Organization

Connecting cable for remote version

Electrode cable

Standard cable	3 ×0.38 mm^2 (20 AWG) with common, braided copper shield (ϕ ~9.5 mm (0.37 in)) and individual shielded cores
Cable for empty pipe detection (EPD)	4 ×0.38 mm^2 (20 AWG) with common, braided copper shield (ϕ ~9.5 mm (0.37 in)) and individual shielded cores

Conductor resistance	≤50 Ω/km (0.015 Ω/ft)
Capacitance: core/shield	≤420 pF/m (128 pF/ft)
Operating temperature	−20 to +80 °C (−68 to +176 °F)

Coil current cable

Standard cable	3 ×0.75 mm² (18 AWG) with common, braided copper shield (Φ ~9 mm (0.35 in))
Conductor resistance	≤37 Ω/km (0.011 Ω/ft)
Capacitance: core/core, shield grounded	≤120 pF/m (37 pF/ft)
Operating temperature	−20 to +80 °C (−68 to +176 °F)
Test voltage for cable insulation	≤ AC 1433 V r.m.s. 50/60 Hz or ≥ DC 2026 V

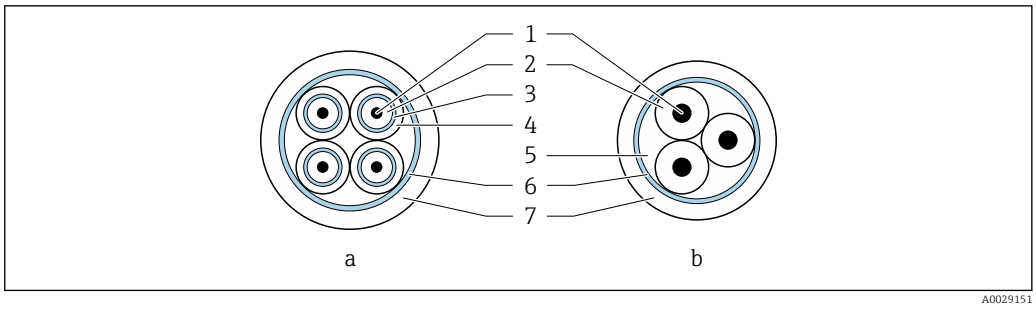

17 Cable cross-section

a Electrode cable
b Coil current cable
1 Core
2 Core insulation
3 Core shield
4 Core jacket
5 Core reinforcement
6 Cable shield
7 Outer jacket

Reinforced connecting cables

Reinforced connecting cables with an additional, reinforcing metal braid should be used for:
- When laying the cable directly in the ground
- Where there is a risk of damage from rodents

Reinforced connecting cables with an additional, reinforcing metal braid can be ordered from Endress+Hauser .

Operation in zones of severe electrical interference

The measuring system meets the general safety requirements → 84 and EMC specifications → 39.

Grounding is by means of the ground terminal provided for the purpose inside the connection housing. The stripped and twisted lengths of cable shield to the ground terminal must be as short as possible.

Performance characteristics

Reference operating conditions

- Error limits following DIN EN 29104, in future ISO 20456
- Water, typically +15 to +45 °C (+59 to +113 °F); 0.5 to 7 bar (73 to 101 psi)
- Data as indicated in the calibration protocol
- Accuracy based on accredited calibration rigs according to ISO 17025

Maximum measured error

Error limits under reference operating conditions

o.r. = of reading

Volume flow
- ±0.5 % o.r. ± 1 mm/s (0.04 in/s)
- Optional: ±0.2 % o.r. ± 2 mm/s (0.08 in/s)

Fluctuations in the supply voltage do not have any effect within the specified range.

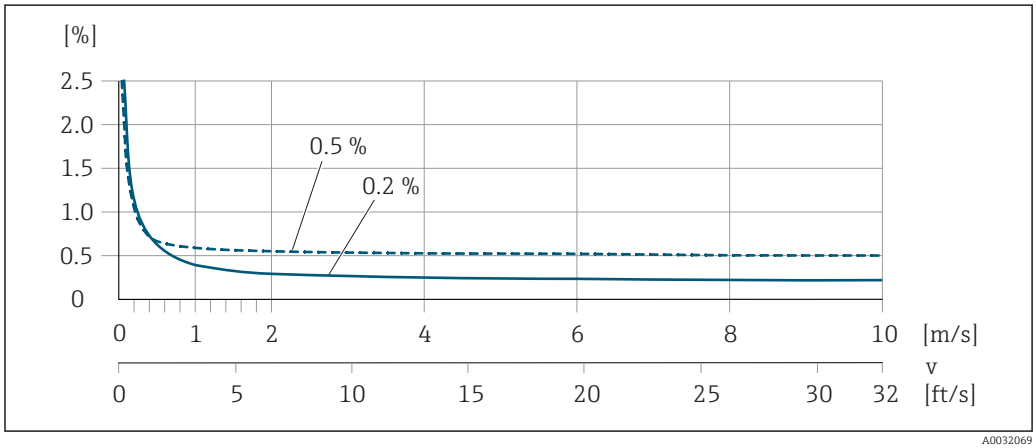

18 Maximum measured error in % o.r.

Electrical conductivity
Max. measured error not specified.

Accuracy of outputs

The outputs have the following base accuracy specifications.

Current output

Accuracy	Max. ±5 µA

Pulse/frequency output

o.r. = of reading

Accuracy	Max. ±50 ppm o.r. (over the entire ambient temperature range)

Repeatability

o.r. = of reading

Volume flow
max. ±0.1 % o.r. ± 0.5 mm/s (0.02 in/s)

Electrical conductivity
Max. ±5 % o.r.

Influence of ambient temperature

Current output

o.r. = of reading

Temperature coefficient	Max. ±0.005 % o.r./°C

Pulse/frequency output

Temperature coefficient	No additional effect. Included in accuracy.

Installation

No special measures such as supports etc. are necessary. External forces are absorbed by the construction of the device.

Mounting location

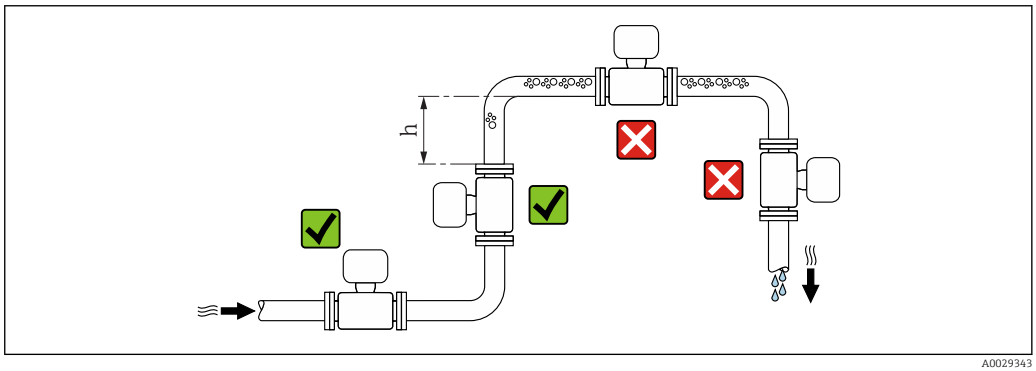

Preferably install the sensor in an ascending pipe, and ensure a sufficient distance to the next pipe elbow: h ≥ 2 × DN

Installation in down pipes

Install a siphon with a vent valve downstream of the sensor in down pipes whose length h ≥ 5 m (16.4 ft). This precaution is to avoid low pressure and the consequent risk of damage to the measuring tube. This measure also prevents the system losing prime.

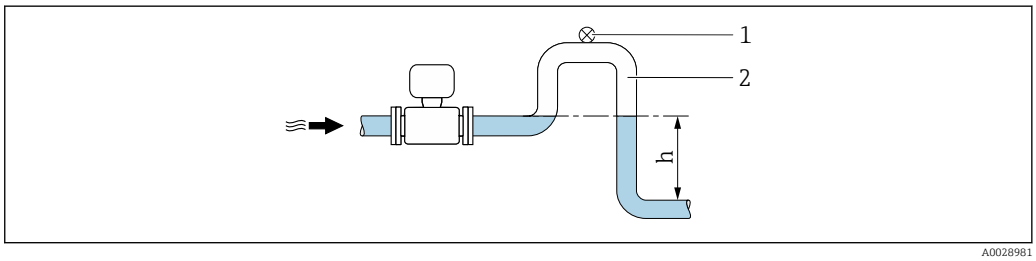

19 Installation in a down pipe

1 Vent valve
2 Pipe siphon
h Length of down pipe

Installation in partially filled pipes

A partially filled pipe with a gradient necessitates a drain-type configuration.

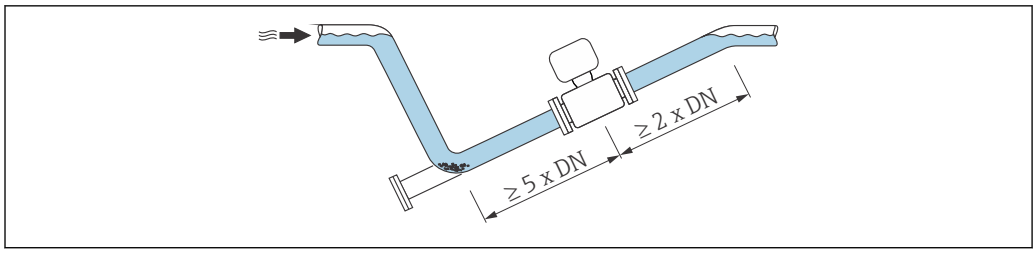

A0029257

For heavy sensors DN ≥ 350 (14")

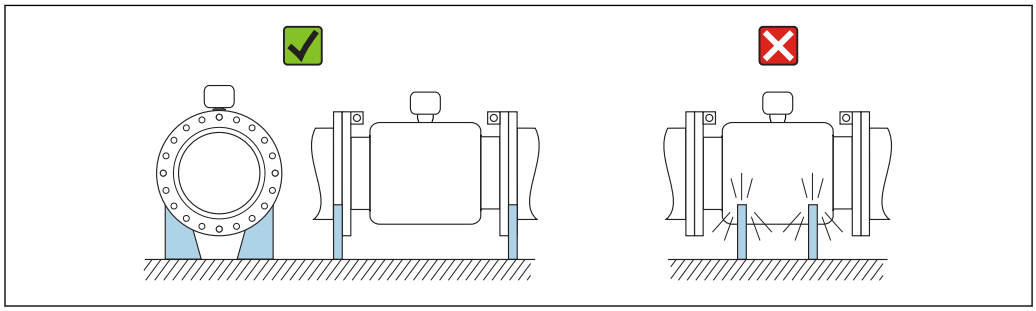

A0016276

Orientation

The direction of the arrow on the sensor nameplate helps you to install the sensor according to the flow direction (direction of medium flow through the piping).

Orientation			Recommendation
A	Vertical orientation	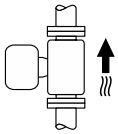 A0015591	✓✓
B	Horizontal orientation, transmitter at top	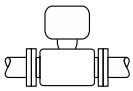 A0015589	✓✓ 1)
C	Horizontal orientation, transmitter at bottom	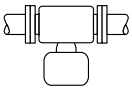 A0015590	✓✓ 2) 3)
D	Horizontal orientation, transmitter at side	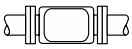 A0015592	✗

1) Applications with low process temperatures may decrease the ambient temperature. To maintain the minimum ambient temperature for the transmitter, this orientation is recommended.
2) Applications with high process temperatures may increase the ambient temperature. To maintain the maximum ambient temperature for the transmitter, this orientation is recommended.
3) To prevent the electronics module from overheating in the case of a sharp rise in temperature (e.g. CIP- or SIP processes), install the device with the transmitter component pointing downwards.

Horizontal

- Ideally, the measuring electrode plane should be horizontal. This prevents brief insulation of the two measuring electrodes by entrained air bubbles.
- Empty pipe detection only works if the transmitter housing is pointing upwards as otherwise there is no guarantee that the empty pipe detection function will actually respond to a partially filled or empty measuring tube.

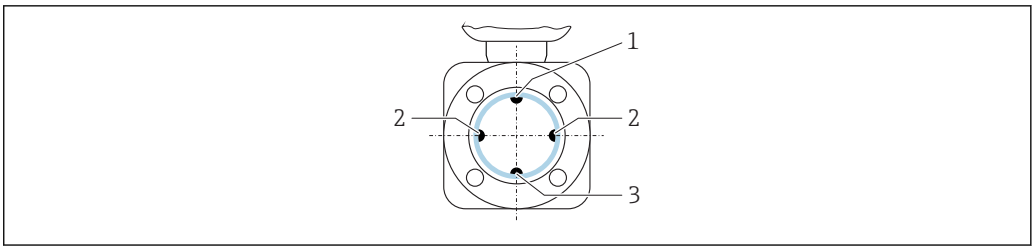

1 EPD electrode for empty pipe detection
2 Measuring electrodes for signal detection
3 Reference electrode for potential equalization

Inlet and outlet runs

If possible, install the sensor upstream from fittings such as valves, T-pieces or elbows.

Observe the following inlet and outlet runs to comply with accuracy specifications:

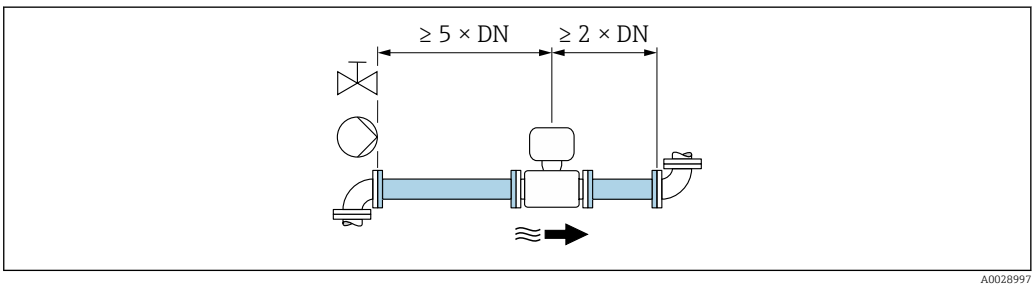

20 Order code for "Design", option A "Insertion length short, ISO/DVGW until DN400, DN450-2000 1:1" and order code for "Design", option B "Insertion length long, ISO/DVGW until DN400, DN450-2000 1:1.3"

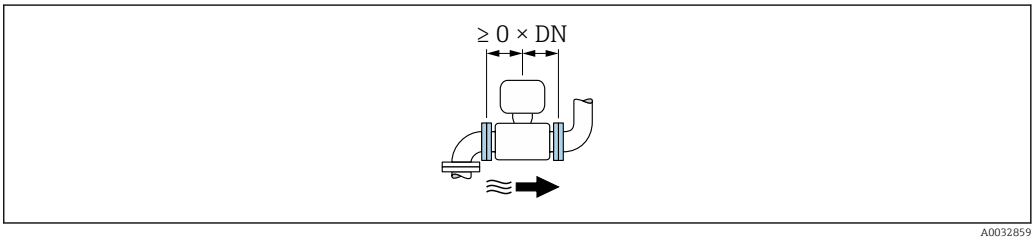

21 Order code for "Design", option C "Insertion length short ISO/DVGW until DN300, w/o inlet and outlet runs, constricted meas.tube"

Adapters

Suitable adapters to DIN EN 545 (double-flange reducers) can be used to install the sensor in larger-diameter pipes. The resultant increase in the rate of flow improves measuring accuracy with very slow-moving fluids.

The nomogram shown here can be used to calculate the pressure loss caused by reducers and expanders:
- Calculate the ratio of the diameters d/D.
- From the nomogram read off the pressure loss as a function of flow velocity (downstream from the reduction) and the d/D ratio.

The nomogram only applies to liquids with a viscosity similar to that of water.

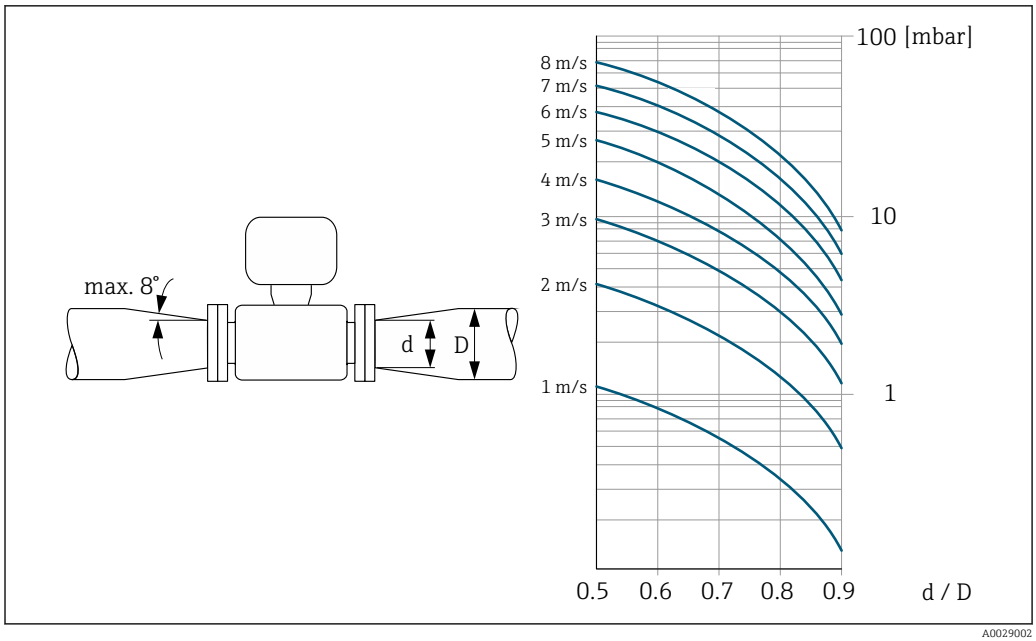

Length of connecting cable

To ensure correct measuring results when using the remote version, observe the maximum permitted length of the connecting cable L_{max}. This length is determined by the conductivity of the fluid.
If measuring liquids in general: 5 µS/cm

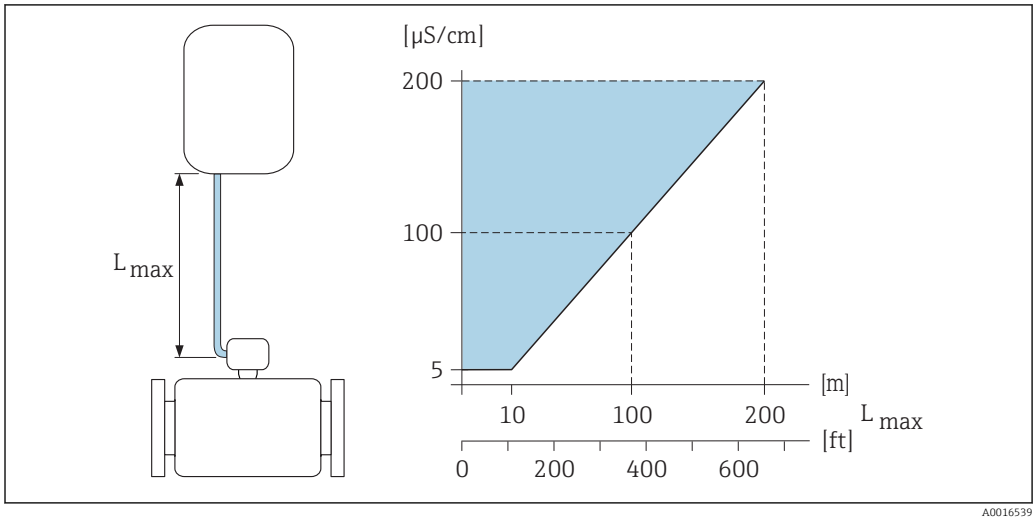

22 *Permitted length of connecting cable for remote version*

Colored area = permitted range
L_{max} = length of connecting cable in [m] ([ft])
[µS/cm] = fluid conductivity

Mounting the transmitter housing

Wall mounting

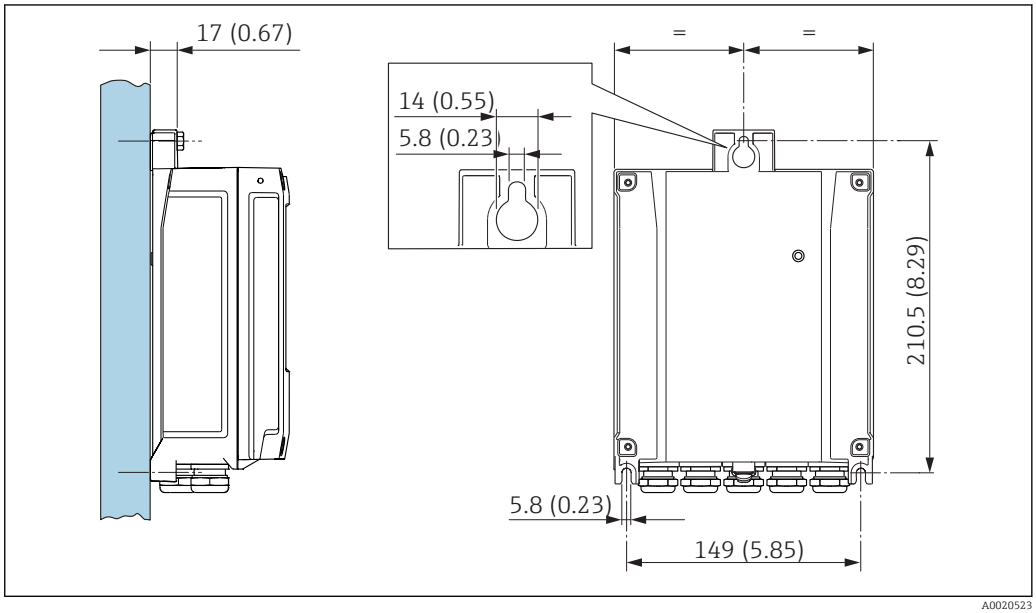

23 *Engineering unit mm (in)*

Post mounting

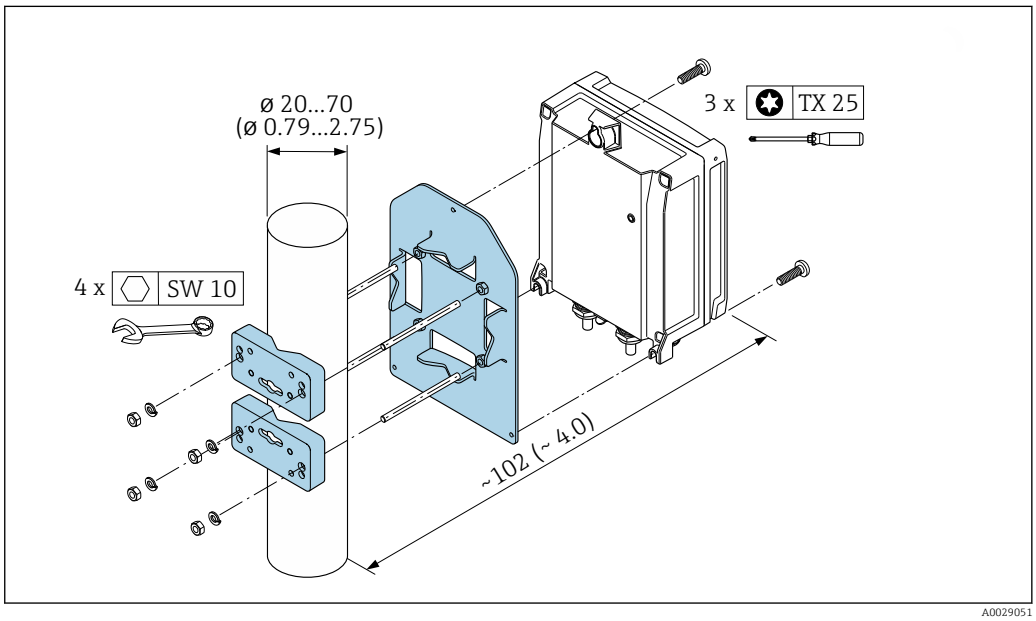

24 *Engineering unit mm (in)*

Special mounting instructions

Display protection

To ensure that the optional display protection can be easily opened, maintain the following minimum head clearance: 350 mm (13.8 in)

Temporary immersion in water

A remote version with IP67 protection, Type 6 is optionally available for temporary immersion in water for up to 168 hours at ≤ 3 m (10 ft) or in exceptional cases for use for up to 48 hours at ≤ 10 m (30 ft).

Compared with the standard degree of protection IP67, Type 4X enclosure, the version IP67, Type 6 enclosure has been designed to withstand short-term or temporary flooding.

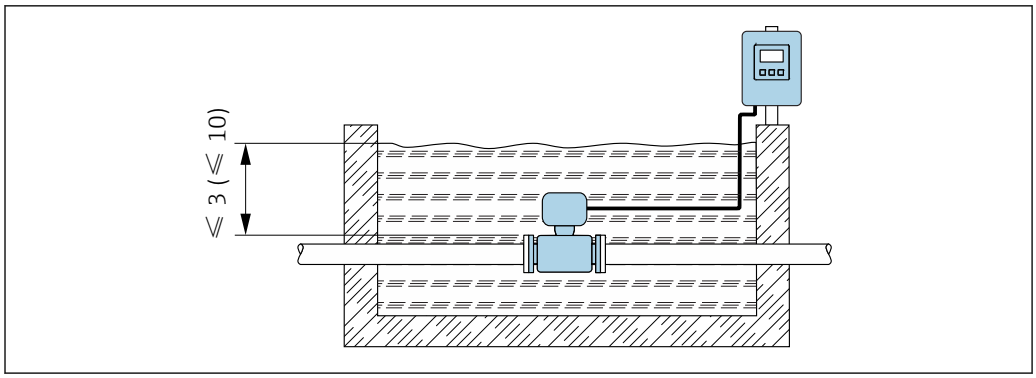

25 *Engineering unit in m(ft)*

Replacement of cable gland on connection housing

Environment

Ambient temperature range

Transmitter	−40 to +60 °C (−40 to +140 °F)
Local display	−20 to +60 °C (−4 to +140 °F), the readability of the display may be impaired at temperatures outside the temperature range.
Sensor	▪ Process connection material, carbon steel: −10 to +60 °C (+14 to +140 °F) ▪ Process connection material, stainless steel: −40 to +60 °C (−40 to +140 °F) Mount the transmitter separately from the sensor if both the ambient and fluid temperatures are high.
Liner	Do not exceed or fall below the permitted temperature range of the liner .

If operating outdoors:
- Install the measuring device in a shady location.
- Avoid direct sunlight, particularly in warm climatic regions.
- Avoid direct exposure to weather conditions.
- If the compact version of the device is insulated at low temperatures, the insulation must also include the device neck.
- Protect the display against impact.
- Protect the display from abrasion by sand in desert areas.

You can order a display guard from Endress+Hauser : → 86

Temperature tables

Observe the interdependencies between the permitted ambient and fluid temperatures when operating the device in hazardous areas.

For detailed information on the temperature tables, see the separate document entitled "Safety Instructions" (XA) for the device.

Storage temperature

The storage temperature corresponds to the operating temperature range of the measuring transmitter and the appropriate measuring sensors.→ 38

- Protect the measuring device against direct sunlight during storage in order to avoid unacceptably high surface temperatures.
- Select a storage location where moisture cannot collect in the measuring device as fungus or bacteria infestation can damage the liner.
- If protection caps or protective covers are mounted these should never be removed before installing the measuring device.

Atmosphere

If a plastic transmitter housing is permanently exposed to certain steam and air mixtures, this can damage the housing.

If you are unsure, please contact your Endress+Hauser Sales Center for clarification.

Degree of protection

Transmitter
- As standard: IP66/67, type 4X enclosure
- When housing is open: IP20, type 1 enclosure

Sensor
- As standard: IP66/67, type 4X enclosure
- Optionally available for remote version:
  - IP67, type 4X enclosure. Suitable for temporary immersion in water for up to 168 hours at depths ≤ 3 m (10 ft) or up to 48 hours at depths ≤ 10 m (30 ft).
  - IP68, type 6P enclosure (for DN ≤ 300 (12") only possible in conjunction with stainless steel flanges)
    Not suitable for use in corrosive atmospheres/liquids or in buried applications if special precautions are not taken.

Vibration resistance

Compact version
- Vibration, sinusoidal according to IEC 60068-2-6
  - 2 to 8.4 Hz, 3.5 mm peak
  - 8.4 to 2 000 Hz, 1 g peak
- Vibration broad-band random, according to IEC 60068-2-64
  - 10 to 200 Hz, 0.003 g^2/Hz
  - 200 to 2 000 Hz, 0.001 g^2/Hz
  - Total: 1.54 g rms

Remote version
- Vibration, sinusoidal according to IEC 60068-2-6
  - 2 to 8.4 Hz, 7.5 mm peak
  - 8.4 to 2 000 Hz, 2 g peak
- Vibration broad-band random, according to IEC 60068-2-64
  - 10 to 200 Hz, 0.01 g^2/Hz
  - 200 to 2 000 Hz, 0.003 g^2/Hz
  - Total: 2.70 g rms

Shock resistance

Shock, half-sine according to IEC 60068-2-27
6 ms 50 g

Impact resistance

Rough handling shocks according to IEC 60068-2-31

Mechanical load

- Protect the transmitter housing against mechanical effects, such as shock or impact; the use of the remote version is sometimes preferable.
- Never use the transmitter housing as a ladder or climbing aid.

Electromagnetic compatibility (EMC)

- As per IEC/EN 61326 and NAMUR Recommendation 21 (NE 21)
- Complies with emission limits for industry as per EN 55011 (Class A)
- Device version with PROFIBUS DP: Complies with emission limits for industry as per EN 50170 Volume 2, IEC 61784

The following applies for PROFIBUS DP: If baud rates > 1.5 MBaud, an EMC cable entry must be used and the cable shield must continue as far as the terminal wherever possible.

Details are provided in the Declaration of Conformity.

Process

Medium temperature range

- 0 to +80 °C (+32 to +176 °F) for hard rubber, DN 350 to 2400 (14 to 90")
- −20 to +50 °C (−4 to +122 °F) for polyurethane, DN 25 to 1200 (1 to 48")
- −20 to +90 °C (−4 to +194 °F) for PTFE, DN 25 to 300 (1 to 12")

Conductivity

≥ 5 µS/cm for liquids in general. Stronger filter damping is required for very low conductivity values.

Note that in the case of the remote version, the requisite minimum conductivity also depends on the cable length → 36.

Pressure-temperature ratings

The following pressure/temperature diagrams apply to all pressure-bearing parts of the device and not just the process connection. The diagrams show the maximum permissible medium pressure depending on the specific medium temperature.

Process connection: lap joint flange/lap joint flange, stamped plate according to EN 1092-1 (DIN 2501) and ASME B16.5; DN 25 to 300 (1 to 12")

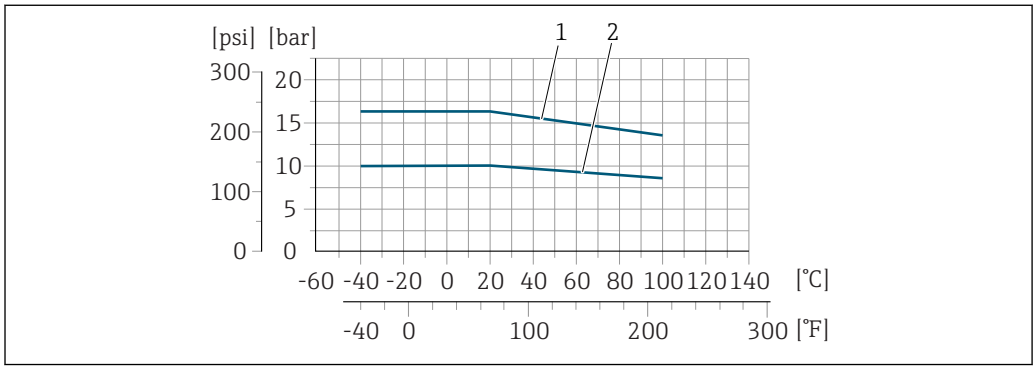

26 *Process connection material: stainless steel (min. -40 °C (-40 °F)), carbon steel (min. -10 °C (+14 °F))*

1 *Lap joint flange PN16/ Class150*
2 *Lap joint flange, stamped plate PN10, lap joint flange PN10*

Process connection: fixed flange according to EN 1092-1 (DIN 2501)

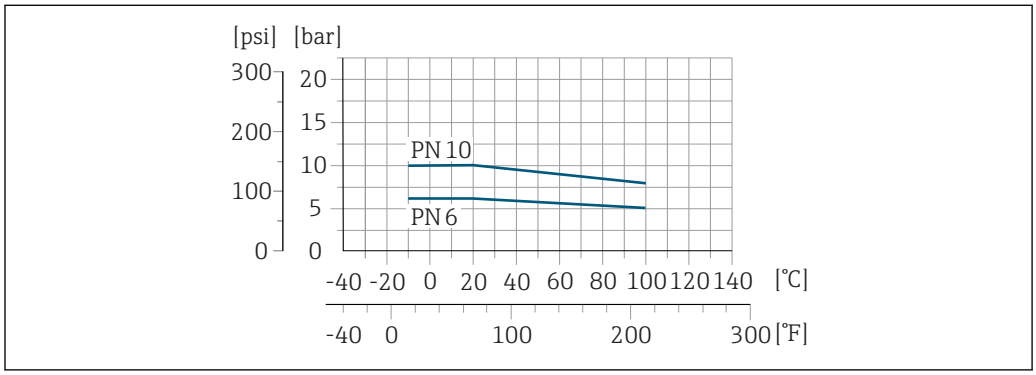

27 *Process connection material: stainless steel, 1.4306/1.4404/1.4571/F316L; carbon steel, A105/ FE410WB/S235JRG2*

Process connection: fixed flange according to ASME B16.5

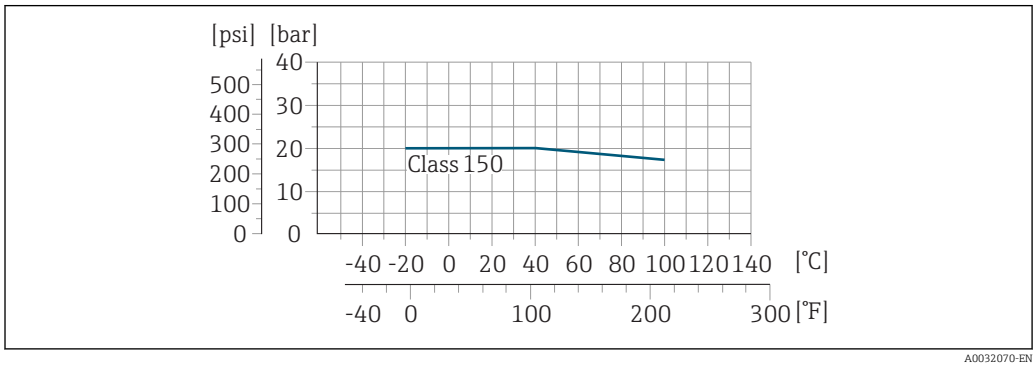

28 *Process connection material: stainless steel, F316L similar to 1.4404; carbon steel, A105/A515(70)*

Process connection: fixed flange according to AWWA C207

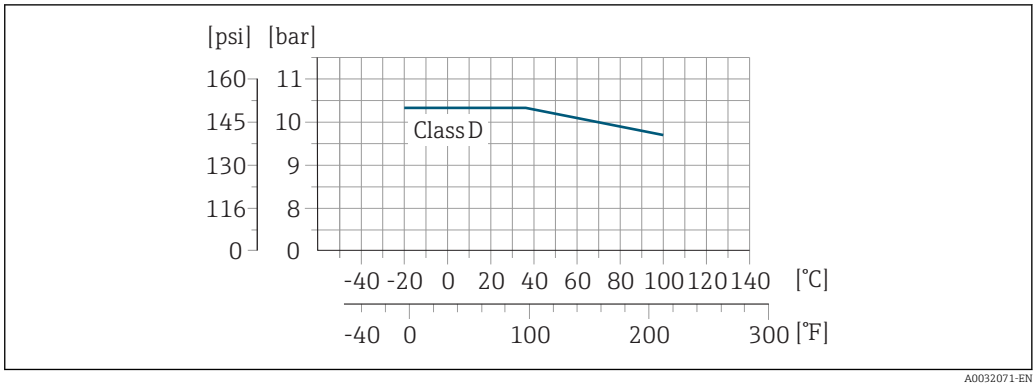

29 *Process connection material: carbon steel, A105/A181/P265GH/S275JR*

Process connection: fixed flange according to AS 2129

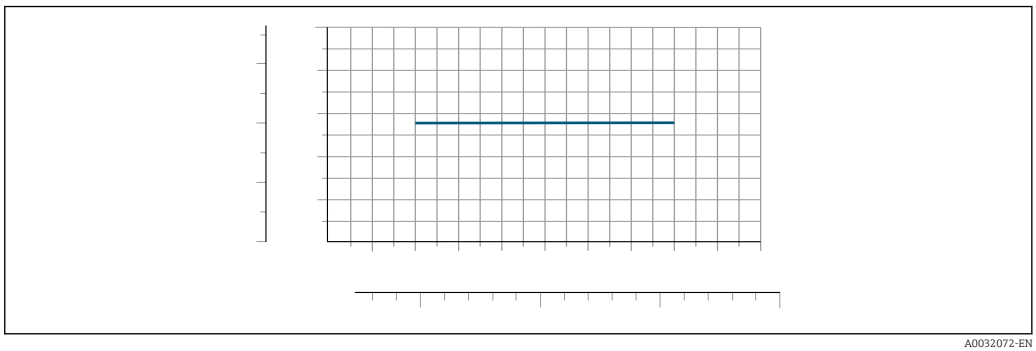

30 *Process connection material: A105/FE410WB/P235GH/P265GH/S235JRG2*

Process connection: fixed flange according to AS 4087

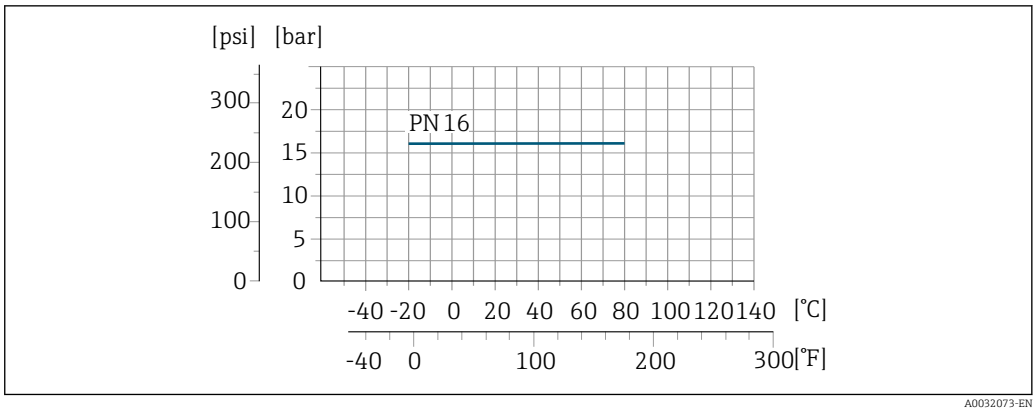

31 *Process connection material: A105/P265GH/S275JR*

Pressure tightness

Liner: hard rubber, polyurethane

Nominal diameter		Liner	Limit values for absolute pressure in [mbar] ([psi]) for fluid temperatures:		
[mm]	[in]		+25 °C (+77 °F)	+50 °C (+122 °F)	+80 °C (+176 °F)
350...2400	14...90	Hard rubber	0 (0)	0 (0)	0 (0)
25...1200	1...48	Polyurethane	0 (0)	0 (0)	–

Liner: PTFE

Nominal diameter		Limit values for absolute pressure in [mbar] ([psi]) for fluid temperatures:	
[mm]	[in]	+25 °C (+77 °F)	+90 °C (+194 °F)
25	1	0 (0)	0 (0)
40	2	0 (0)	0 (0)
50	2	0 (0)	0 (0)
65	2 ½	0 (0)	40 (0.58)
80	3	0 (0)	40 (0.58)
100	4	0 (0)	135 (2.0)
125	5	135 (2.0)	240 (3.5)
150	6	135 (2.0)	240 (3.5)
200	8	200 (2.9)	290 (4.2)
250	10	330 (4.8)	400 (5.8)
300	12	400 (5.8)	500 (7.3)

Flow limit

The diameter of the pipe and the flow rate determine the nominal diameter of the sensor. The optimum velocity of flow is between 2 to 3 m/s (6.56 to 9.84 ft/s). Also match the velocity of flow (v) to the physical properties of the fluid:
- v < 2 m/s (6.56 ft/s): for abrasive fluids (e.g. potter's clay, lime milk, ore slurry)
- v > 2 m/s (6.56 ft/s): for fluids producing buildup (e.g. wastewater sludge)

A necessary increase in the flow velocity can be achieved by reducing the sensor nominal diameter.

For an overview of the full scale values for the measuring range, see the "Measuring range" section → 📄 8

Pressure loss

- No pressure loss occurs if the sensor is installed in a pipe with the same nominal diameter.
- Pressure losses for configurations incorporating adapters according to DIN EN 545 → 📄 35

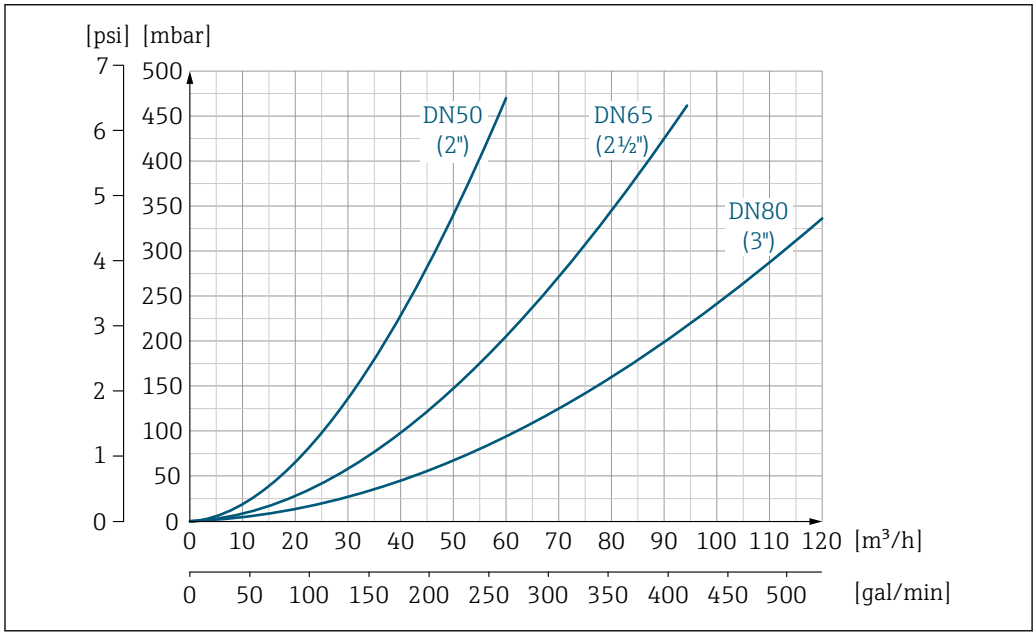

32 Pressure loss DN 50 to 80 (2 to 3") in the case of order code for "Design", option C "Insertion length short ISO/DVGW to DN300, without inlet/outlet runs, constricted meas.tube"

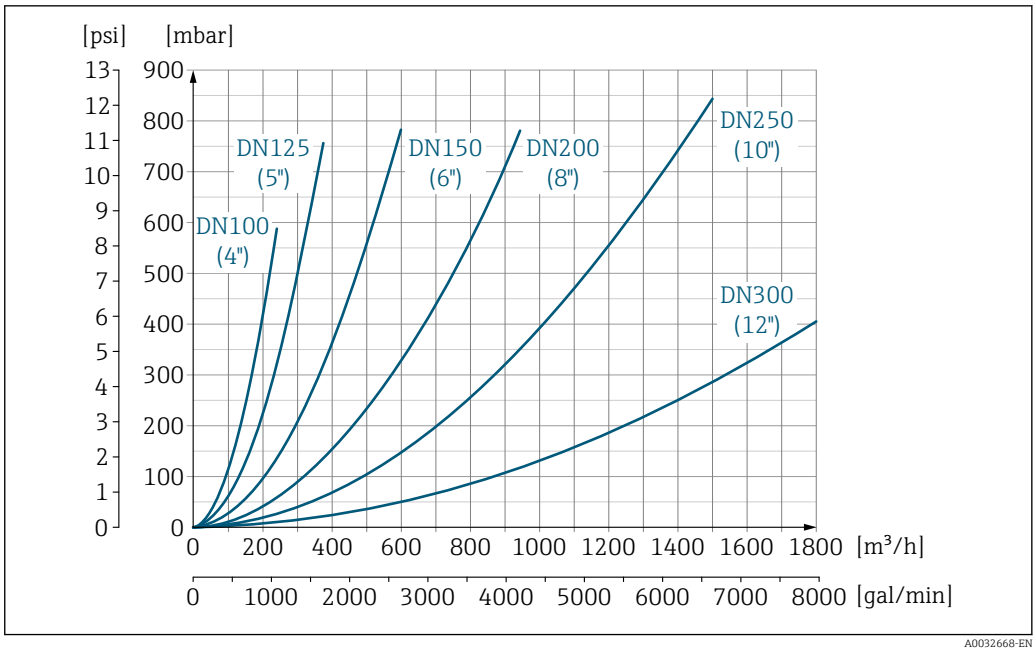

33 *Pressure loss DN 100 to 300 (4 to 12") in the case of order code for "Design", option C "Insertion length short ISO/DVGW to DN300, without inlet/outlet runs, constricted meas.tube"*

System pressure

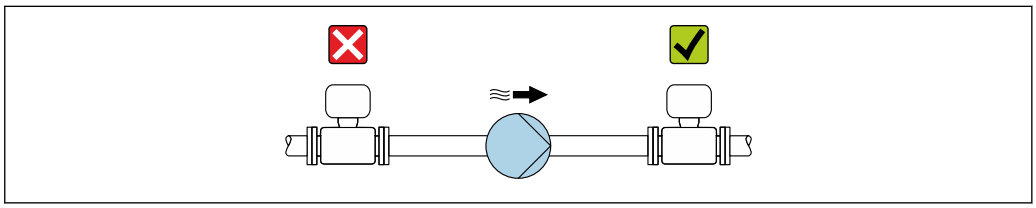

Never install the sensor on the pump suction side in order to avoid the risk of low pressure, and thus damage to the liner.

Furthermore, install pulse dampers if reciprocating, diaphragm or peristaltic pumps are used.

- Information on the liner's resistance to partial vacuum → 41
- Information on the shock resistance of the measuring system → 39
- Information on the vibration resistance of the measuring system → 39

Vibrations

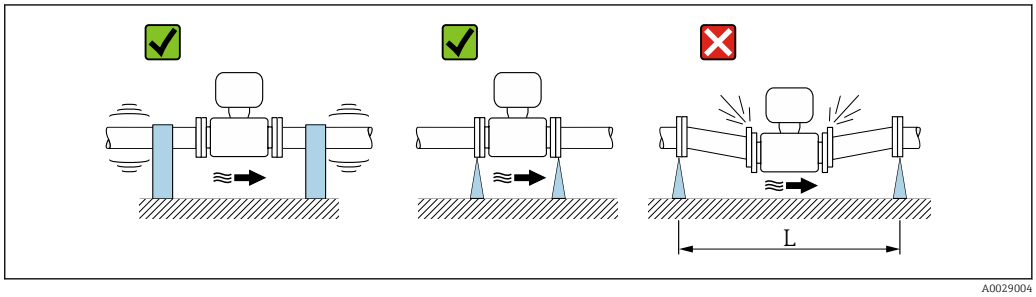

34 *Measures to avoid device vibrations (L > 10 m (33 ft))*

In the event of very strong vibrations, the pipe and sensor must be supported and fixed.

It is also advisable to mount the sensor and transmitter separately.

- Information on the shock resistance of the measuring system → 39
- Information on the vibration resistance of the measuring system → 39

Mechanical construction

Dimensions in SI units

Compact version

Order code for "Housing", option M "Compact, polycarbonate" or option A "Compact, aluminum, coated"

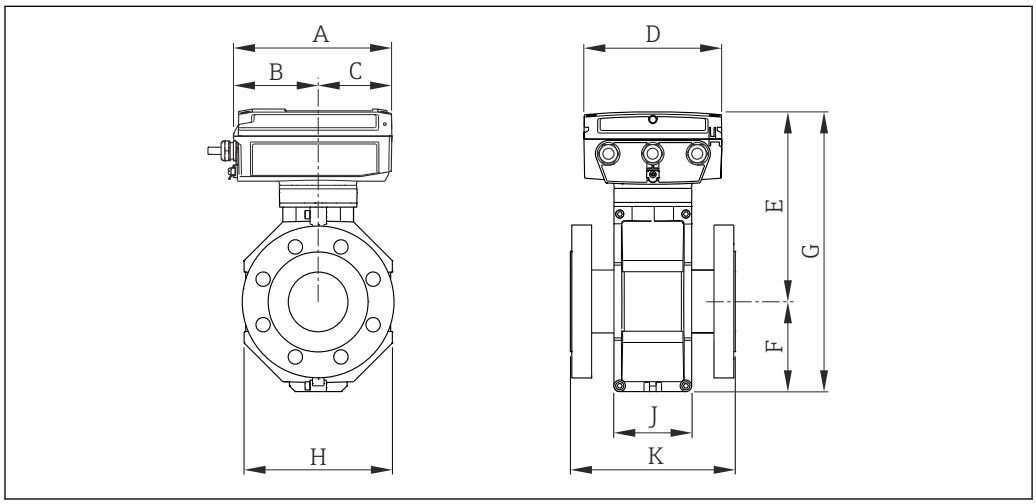

A0020352

DN [mm]	A [mm]	B [mm]	C [mm]	D [mm]	E [mm]	F [mm]	G [mm]	H [mm]	J [mm]	K [1)] [mm]
25	193	103	90	167	222	84	306	120	94	200
32	193	103	90	167	222	84	306	120	94	200
40	193	103	90	167	222	84	306	120	94	200
50	193	103	90	167	222	84	306	120	94	200
65	193	103	90	167	247	109	356	180	94	200
80	193	103	90	167	247	109	356	180	94	200
100	193	103	90	167	247	109	356	180	94	250
125	193	103	90	167	287	150	437	260	140	250
150	193	103	90	167	287	150	437	260	140	300
200	193	103	90	167	312	180	492	324	156	350
250	193	103	90	167	337	205	542	400	166	450
300	193	103	90	167	362	230	592	460	166	500

1) The length is independent of the selected pressure rating. Length in accordance with DVGW/ISO.

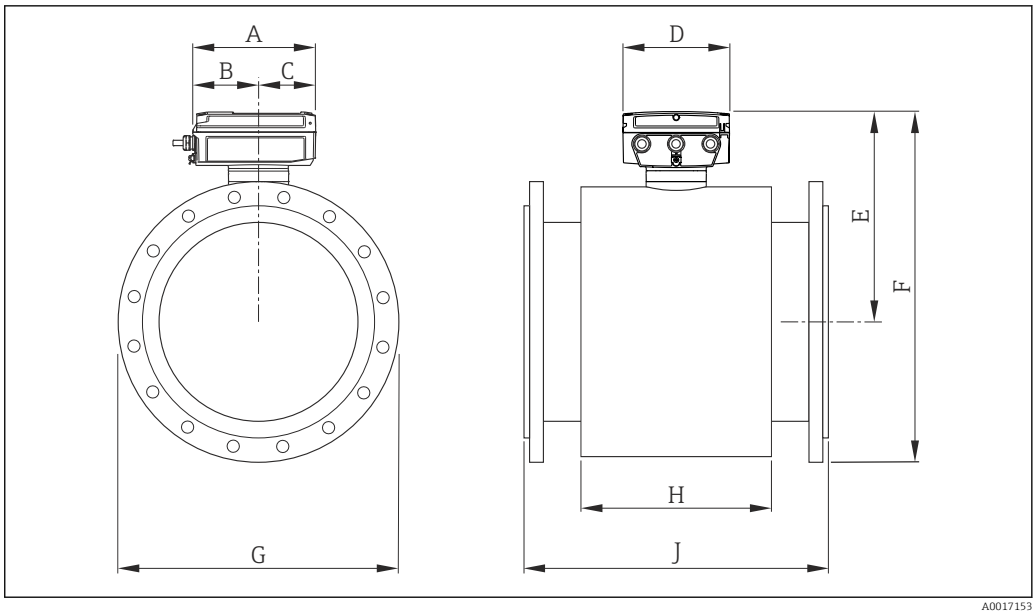

A0017153

DN [mm]	A [mm]	B [mm]	C [mm]	D [mm]	E [mm]	H [mm]	J [mm]
350	193	103	90	167	386	290	550
375	193	103	90	167	412	290	600
400	193	103	90	167	412	290	600
450	193	103	90	167	440	290	600
500	193	103	90	167	465	290	600
600	193	103	90	167	506	290	600
700	193	103	90	167	571	424	700
750	193	103	90	167	608	454	750
800	193	103	90	167	627	500	800
900	193	103	90	167	677	580	900
1000	193	103	90	167	727	664	1000
1050	193	103	90	167	763	759	1050
1200	193	103	90	167	841	832	1200
1350	193	103	90	167	953	1008	1350
1400	193	103	90	167	953	1008	1400
1500	193	103	90	167	1053	1147	1500
1600	193	103	90	167	1053	1147	1600
1650	193	103	90	167	1104	1284	1650
1800	193	103	90	167	1161	1379	1800
2000	193	103	90	167	1272	1569	2000
2150	193	103	90	167	1372	1711	2150
2200	193	103	90	167	1372	1711	2200
2300	193	103	90	167	1477	1859	2300
2400	193	103	90	167	1477	1859	2400

	Dimension F					Dimension G				
	EN (DIN)			ASME	AS	EN (DIN)			ASME	AS
DN	PN 6	PN 10	PN 16	AWWA		PN 6	PN 10	PN 16	AWWA	
[mm]	[mm]	[mm]	[mm]	[mm]	[mm]	[mm]	[mm]	[mm]	[mm]	[mm]
350	631	638	702	653	648	490	505	520	533	525
375	–	–	–	–	687	–	–	–	–	550
400	682	694	760	710	702	540	565	580	597	580
450	737	747	823	757	760	595	615	640	635	640
500	787	800	926	814	817	645	670	715	699	705
600	883	896	1026	912	918	755	780	840	813	825
700	1001	1018	1145	1034	1026	860	895	910	927	910
750	–	–	–	1100	1106	–	–	–	984	995
800	1115	1135	1240	1157	1157	975	1015	1025	1060	1060
900	1215	1235	1240	1261	1265	1075	1115	1125	1168	1175
1000	1315	1342	1355	1372	1355	1175	1230	1255	1289	1255
1050	–	–	–	1436	–	–	–	–	1346	–
1200	1544	1569	1584	1597	1586	1405	1455	1485	1511	1490
1350	–	–	–	1795	–	–	–	–	1683	–
1400	1768	1791	1796	–	–	1630	1675	1685	–	–
1500	–	–	–	1980	–	–	–	–	1854	–
1600	1968	2011	2019	–	–	1830	1915	1930	–	–
1650	–	–	–	2120	–	–	–	–	2032	–
1800	2183	2218	2226	2259	–	2045	2115	2130	2197	–
2000	2404	2434	2444	2453	–	2265	2325	2345	2362	–
2150	–	–	–	2639	–	–	–	–	2534	–
2200	2609	2647	–	–	–	2475	2550	–	–	–
2300	–	–	–	2829	–	–	–	–	2705	–
2400	2819	2857	–	–	–	2685	2760	–	–	–

Order code for "Housing", option Q "Compact, polycarbonate, inclined" or option R "Compact, aluminum, coated, inclined"

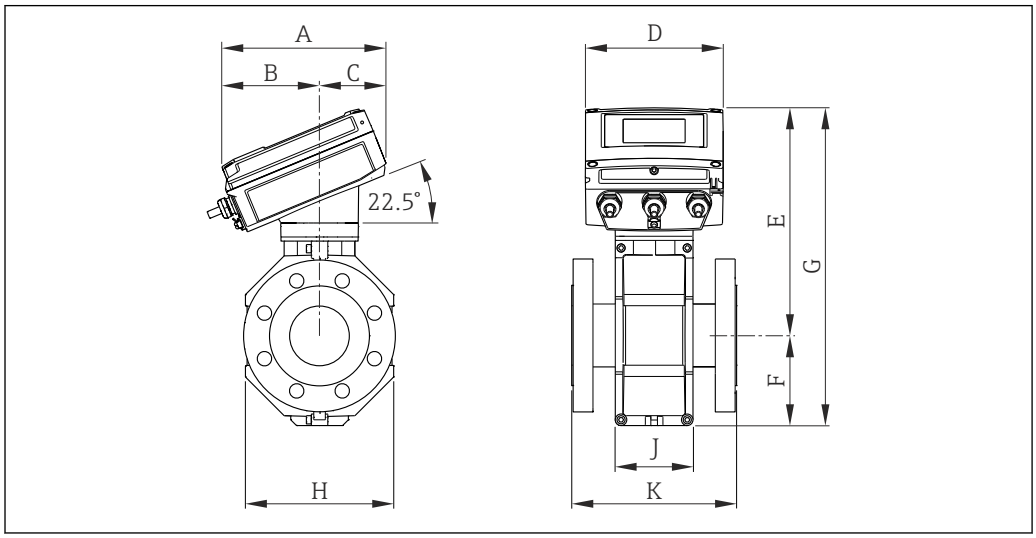

A0020353

DN [mm]	A [mm]	B [mm]	C [mm]	D [mm]	E [mm]	F [mm]	G [mm]	H [mm]	J [mm]	K[1] [mm]
25	199	119	80	167	267	84	351	120	94	200
32	199	119	80	167	267	84	351	120	94	200
40	199	119	80	167	267	84	351	120	94	200
50	199	119	80	167	267	84	351	120	94	200
65	199	119	80	167	292	109	401	180	94	200
80	199	119	80	167	292	109	401	180	94	200
100	199	119	80	167	292	109	401	180	94	250
125	199	119	80	167	332	150	482	260	140	250
150	199	119	80	167	332	150	482	260	140	300
200	199	119	80	167	357	180	537	324	156	350
250	199	119	80	167	382	205	587	400	166	450
300	199	119	80	167	407	230	637	460	166	500

1) The length is independent of the selected pressure rating. Length in accordance with DVGW/ISO.

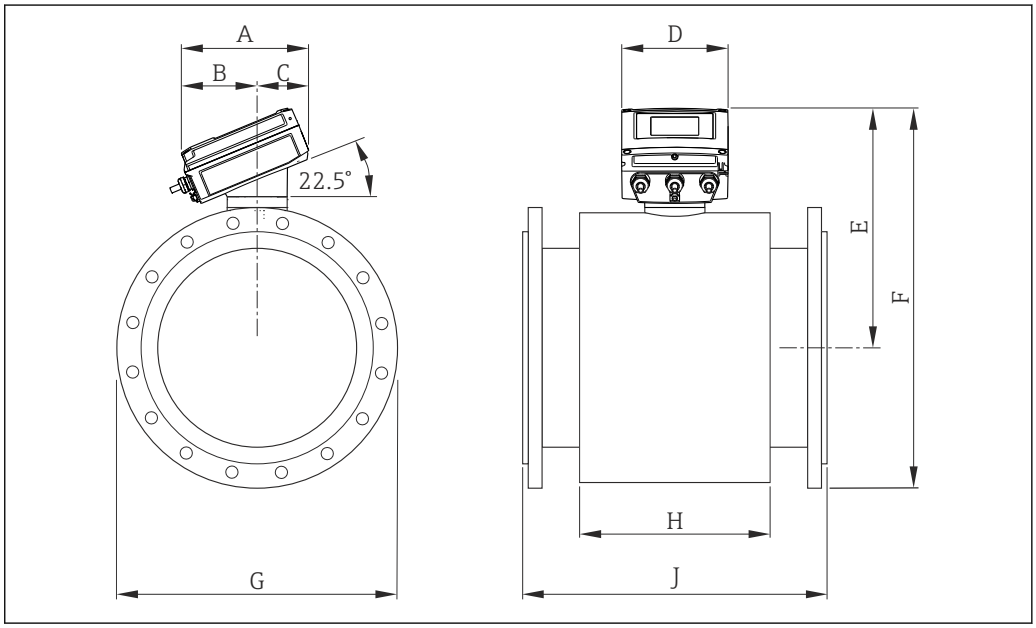

A0020393

DN [mm]	A [mm]	B [mm]	C [mm]	D [mm]	E [mm]	H [mm]	J [mm]
350	199	119	80	167	431	290	550
375	199	119	80	167	457	290	600
400	199	119	80	167	457	290	600
450	199	119	80	167	485	290	600
500	199	119	80	167	510	290	600
600	199	119	80	167	551	290	600
700	199	119	80	167	616	424	700
750	199	119	80	167	653	454	750
800	199	119	80	167	672	500	800

DN [mm]	A [mm]	B [mm]	C [mm]	D [mm]	E [mm]	H [mm]	J [mm]
900	199	119	80	167	722	580	900
1000	199	119	80	167	772	664	1000
1050	199	119	80	167	808	759	1050
1200	199	119	80	167	886	832	1200
1350	199	119	80	167	998	1008	1350
1400	199	119	80	167	953	1008	1400
1500	199	119	80	167	1098	1147	1500
1600	199	119	80	167	1098	1147	1600
1650	199	119	80	167	1149	1284	1650
1800	199	119	80	167	1206	1379	1800
2000	199	119	80	167	1317	1569	2000
2150	199	119	80	167	1417	1711	2150
2200	199	119	80	167	1417	1711	2200
2300	199	119	80	167	1522	1859	2300
2400	199	119	80	167	1522	1859	2400

	Dimension F					Dimension G				
	EN (DIN)			ASME	AS	EN (DIN)			ASME	AS
DN	PN 6	PN 10	PN 16	AWWA		PN 6	PN 10	PN 16	AWWA	
[mm]	[mm]	[mm]	[mm]	[mm]	[mm]	[mm]	[mm]	[mm]	[mm]	[mm]
350	676	683	618	698	693	490	505	520	533	525
375	–	–	–	–	732	–	–	–	–	550
400	727	739	672	755	747	540	565	580	597	580
450	782	792	732	802	805	595	615	640	635	640
500	832	845	795	859	862	645	670	715	699	705
600	928	941	898	957	963	755	780	840	813	825
700	1046	1063	1008	1079	1071	860	895	910	927	910
750	–	–	–	1145	1151	–	–	–	984	995
800	1160	1180	1112	1202	1202	975	1015	1025	1060	1060
900	1260	1280	1212	1306	1310	1075	1115	1125	1168	1175
1000	1360	1387	1327	1417	1400	1175	1230	1225	1289	1255
1050	–	–	–	1481	–	–	–	–	1346	–
1200	1589	1614	1556	1642	1631	1405	1455	1255	1511	1490
1350	–	–	–	1840	–	–	–	–	1683	–
1400	1813	1836	1768	–	–	1630	1675	1685	–	–
1500	–	–	–	2025	–	–	–	–	1854	–
1600	2013	2056	1991	–	–	1830	1915	1930	–	–
1650	–	–	–	2165	–	–	–	–	2032	–
1800	2228	2263	2198	2304	–	2045	2115	2130	2197	–
2000	2449	2479	2416	2498	–	2265	2325	2345	2362	–
2150	–	–	–	2684	–	–	–	–	2534	–

DN [mm]	Dimension F					Dimension G				
	EN (DIN)			ASME	AS	EN (DIN)			ASME	AS
	PN 6 [mm]	PN 10 [mm]	PN 16 [mm]	AWWA [mm]	[mm]	PN 6 [mm]	PN 10 [mm]	PN 16 [mm]	AWWA [mm]	[mm]
2200	2654	2692	–	–	–	2475	2550	–	–	–
2300	–	–	–	2874	–	–	–	–	2705	–
2400	2864	2902	–	–	–	2685	2760	–	–	–

Transmitter remote version

Order code for "Housing", option N "Remote, polycarbonate" or option P "Remote, aluminum coated"

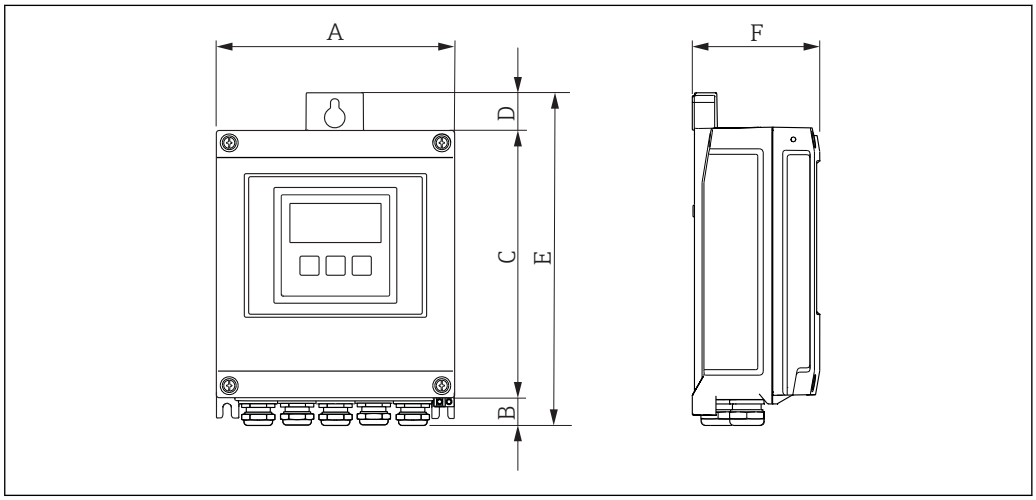

A0020522

A [mm]	B [mm]	C [mm]	D [mm]	E [mm]	F [mm]
167	21	187	24	232	80

Sensor remote version

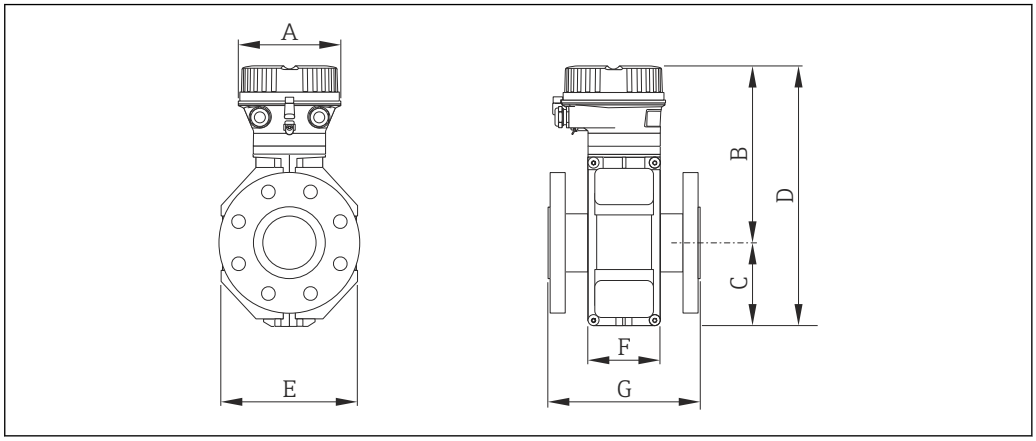

A0017282

DN [mm]	A [mm]	B [mm]	C [mm]	D [mm]	E [mm]	F [mm]	G [1)] [mm]
25	136	207	84	291	120	94	200
32	136	207	84	291	120	94	200
40	136	207	84	291	120	94	200
50	136	207	84	291	120	94	200
65	136	232	109	341	180	94	200
80	136	232	109	341	180	94	200
100	136	232	109	341	180	94	250
125	136	272	150	422	260	140	250
150	136	272	150	422	260	140	300
200	136	297	180	477	324	156	350
250	136	322	205	527	400	156	450
300	136	347	230	577	460	166	500

1) The length is independent of the selected pressure rating. Length in accordance with DVGW/ISO.

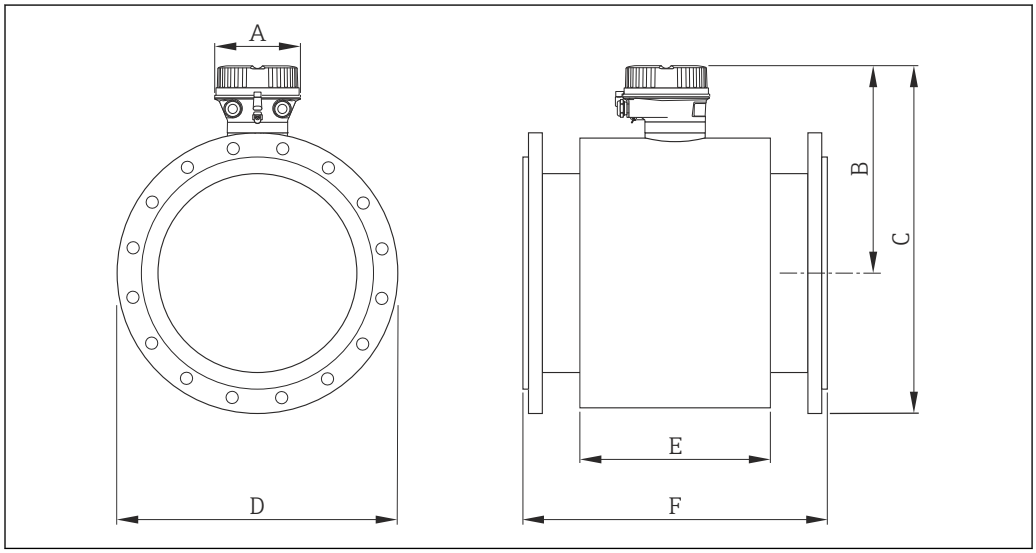

A0017284

DN [mm]	A [mm]	B [mm]	E [mm]	F [mm]
350	136	358	290	550
375	136	384	290	600
400	136	384	290	600
450	136	412	290	600
500	136	437	290	600
600	136	478	290	600
700	136	543	424	700
750	136	579	454	750
800	136	599	500	800
900	136	649	580	900
1000	136	699	664	1000

DN [mm]	A [mm]	B [mm]	E [mm]	F [mm]
1050	136	735	759	1050
1200	136	813	832	1200
1350	136	925	1008	1350
1400	136	925	1008	1400
1500	136	1025	1147	1500
1600	136	1025	1147	1600
1650	136	1076	1284	1650
1800	136	1133	1379	1800
2000	136	1244	1569	2000
2150	136	1344	1711	2150
2200	136	1344	1711	2200
2300	136	1449	1859	2300
2400	136	1449	1859	2400

	Dimension C					Dimension D				
	EN (DIN)			ASME	AS	EN (DIN)			ASME	AS
DN [mm]	PN 6 [mm]	PN 10 [mm]	PN 16 [mm]	AWWA [mm]	[mm]	PN 6 [mm]	PN 10 [mm]	PN 16 [mm]	AWWA [mm]	[mm]
350	603	610	616	625	620	490	505	520	533	525
375	–	–	–	–	659	–	–	–	–	550
400	654	666	672	682	674	540	565	580	597	580
450	709	719	729	729	732	595	615	640	635	640
500	759	772	791	786	789	645	670	715	699	705
600	855	868	903	884	890	755	780	840	813	825
700	973	990	1009	1006	998	860	895	910	927	910
750	–	–	–	1072	1078	–	–	–	984	995
800	1087	1107	1123	1129	1129	975	1015	1025	1060	1060
900	1187	1207	1223	1233	1237	1075	1115	1125	1168	1175
1000	1287	1314	1338	1344	1327	1175	1230	1225	1289	1255
1050	–	–	–	1408	–	–	–	–	1346	–
1200	1516	1541	1567	1569	1558	1405	1455	1255	1511	1490
1350	–	–	–	1767	–	–	–	–	1683	–
1400	1740	1763	1779	–	–	1630	1675	1685	–	–
1500	–	–	–	1952	–	–	–	–	1854	–
1600	1940	1983	2002	–	–	1830	1915	1930	–	–
1650	–	–	–	2092	–	–	–	–	2032	–
1800	2155	2190	2209	2231	–	2045	2115	2130	2197	–
2000	2376	2406	2427	2425	–	2265	2325	2345	2362	–
2150	–	–	–	2611	–	–	–	–	2534	–
2200	2581	2619	–	–	–	2475	2550	–	–	–

DN [mm]	Dimension C					Dimension D				
	EN (DIN)			ASME	AS	EN (DIN)			ASME	AS
	PN 6 [mm]	PN 10 [mm]	PN 16 [mm]	AWWA [mm]	[mm]	PN 6 [mm]	PN 10 [mm]	PN 16 [mm]	AWWA [mm]	[mm]
2300	–	–	–	2801	–	–	–	–	2705	–
2400	2791	2829	–	–	–	2685	2760	–	–	–

Order code for "Sensor option", option CK "IP68, Type 6P, waterproof"

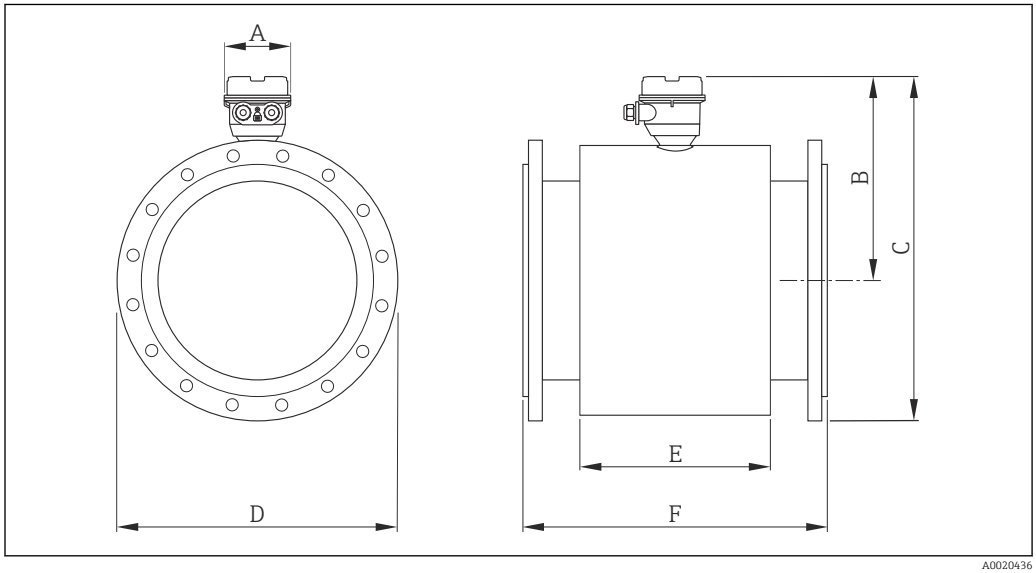

A0020436

DN [mm]	A [mm]	B [mm]	C [mm]	D [mm]	E [mm]	F [mm]
350	112	364	617	520	290	550
375	112	390	–	–	290	600
400	112	390	673	580	290	600
450	112	418	730	640	290	600
500	112	443	792	715	290	600
600	112	484	904	840	290	600
700	112	549	1010	910	424	700
750	112	585	–	–	454	750
800	112	605	1224	1025	500	800
900	112	655	1224	1125	580	900
1000	112	705	1339	1225	664	1000
1050	112	741	–	–	759	1050
1200	112	819	1568	1255	832	1200
1350	112	931	–	–	1008	1350
1400	112	931	1780	1685	1008	1400
1500	112	1031	–	–	1147	1500
1600	112	1031	2003	1930	1147	1600
1650	112	1082	–	–	1284	1650

DN [mm]	A [mm]	B [mm]	C [mm]	D [mm]	E [mm]	F [mm]
1800	112	1139	2210	2130	1379	1800
2000	112	1250	2428	2345	1569	2000

Accessories

Ground disks for flange connections

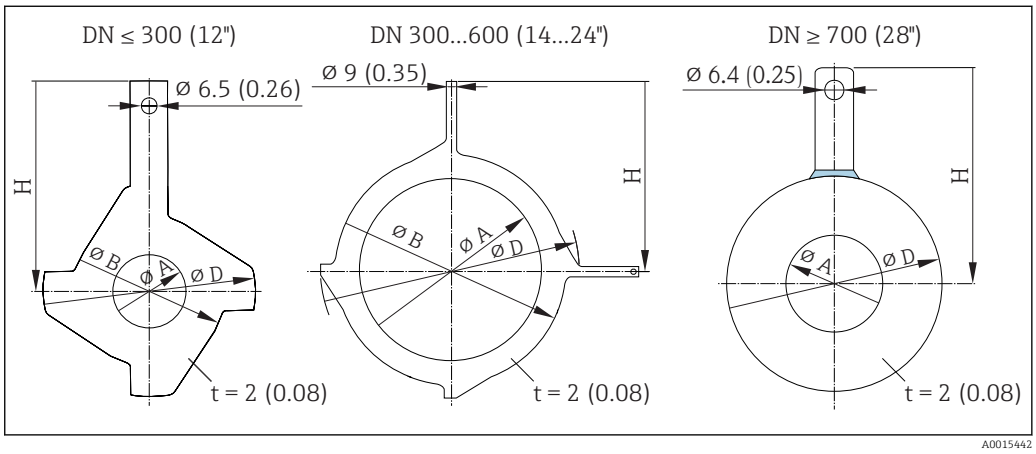

35 Engineering unit mm (in)

DN [mm]	Pressure rating	A [mm]	B [mm]	D [mm]	H [mm]
25	1)	26	62	77.5	87.5
32	1)	35	80	87.5	94.5
40	1)	41	82	101	103
50	1)	52	101	115.5	108
65	1)	68	121	131.5	118
80	1)	80	131	154.5	135
100	1)	104	156	186.5	153
125	1)	130	187	206.5	160
150	1)	158	217	256	184
200	1)	206	267	288	205
250	1)	260	328	359	240
300	1)	312	375	413	273
350	DIN, PN 6	343	433	479	365
350	DIN, PN 10	343	400	479	365
350	ASME, Class 150	343	400	479	365
400	DIN, PN 6	393	470	542	395
400	DIN, PN 10	393	469	542	395
400	ASME, Class 150	393	469	542	395
450	DIN, PN 6	439	525	583	417
450	DIN, PN 10	439	535	583	417

DN [mm]	Pressure rating	A [mm]	B [mm]	D [mm]	H [mm]
450	ASME, Class 150	439	535	583	417
500	DIN, PN 6	493	575	650	460
500	DIN, PN 10	493	588	650	460
500	ASME, Class 150	493	588	650	460
600	DIN, PN 6	593	676	766	522
600	DIN, PN 10	593	688	766	522
600	ASME, Class 150	593	688	766	522
700	DIN, PN 6	697	–	786	460
700	DIN, PN 10	693	–	813	480
700	AS, PN 16	687	–	807	490
700	AWWA, Class D	693	–	832	494
750	AWWA, Class D	743	–	833	523
800	DIN, PN 6	799	–	893	520
800	DIN, PN 10	795	–	920	540
800	AS, PN 16	789	–	914	550
800	AWWA, Class D	795	–	940	561
900	DIN, PN 6	897	–	993	570
900	DIN, PN 10	893	–	1020	590
900	AS, PN 16	886	–	1014	595
900	AWWA, Class D	893	–	1048	615
1000	DIN, PN 6	999	–	1093	620
1000	DIN, PN 10	995	–	1127	650
1000	AS, PN 16	988	–	1131	660
1000	AWWA, Class D	995	–	1163	675
1050	AWWA, Class D	1044	–	1220	704
1200	DIN, PN 6	1203	–	1310	733

1) Ground disks can be used for all the flange standards/pressure ratings which can be supplied in the standard version.

Dimensions in US units

Compact version

Order code for "Housing", option M "Compact, polycarbonate" or option A "Compact, aluminum, coated"

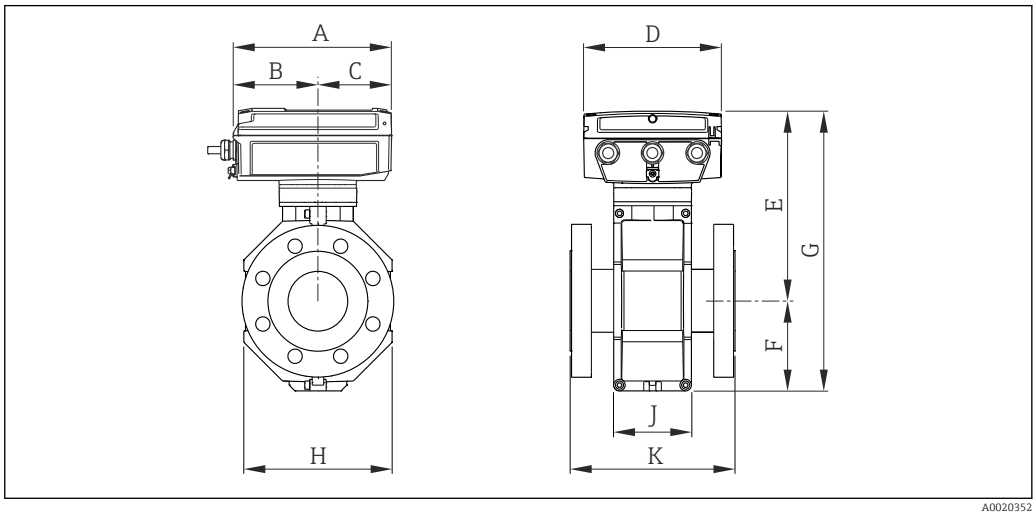

A0020352

DN [in]	A [in]	B [in]	C [in]	D [in]	E [in]	F [in]	G [in]	H [in]	J [in]	K [1)] [in]
1	7.60	4.06	3.54	6.57	8.74	3.31	12.1	4.72	3.70	7.87
1 ½	7.60	4.06	3.54	6.57	8.74	3.31	12.1	4.72	3.70	7.87
2	7.60	4.06	3.54	6.57	8.74	3.31	12.1	4.72	3.70	7.87
3	7.60	4.06	3.54	6.57	9.72	4.29	14.0	7.09	3.70	7.87
4	7.60	4.06	3.54	6.57	9.72	4.29	14.0	7.09	3.70	9.84
6	7.60	4.06	3.54	6.57	11.3	5.91	17.2	10.2	5.51	11.8
8	7.60	4.06	3.54	6.57	12.3	7.09	19.4	12.8	6.14	13.8
10	7.60	4.06	3.54	6.57	13.3	8.07	21.3	15.8	6.54	17.7
12	7.60	4.06	3.54	6.57	14.3	9.06	23.3	18.1	6.54	19.7

1) The length is independent of the selected pressure rating. Length in accordance with DVGW/ISO.

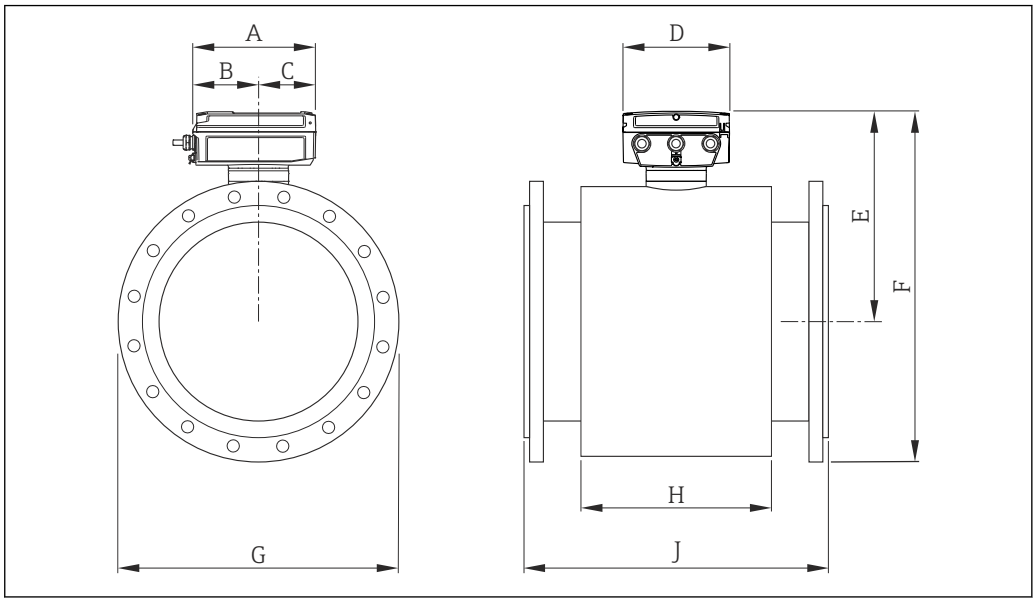

A0017153

DN [in]	A [in]	B [in]	C [in]	D [in]	E [in]	H [in]	J [in]
14	7.60	4.06	3.54	6.57	15.2	11.4	21.6
15	7.60	4.06	3.54	6.57	16.2	11.4	23.6
16	7.60	4.06	3.54	6.57	16.2	11.4	23.6
18	7.60	4.06	3.54	6.57	17.3	11.4	23.6
20	7.60	4.06	3.54	6.57	18.3	11.4	23.6
24	7.60	4.06	3.54	6.57	19.9	11.4	23.6
28	7.60	4.06	3.54	6.57	22.5	16.7	27.6
30	7.60	4.06	3.54	6.57	23.9	17.9	29.5
32	7.60	4.06	3.54	6.57	24.7	19.7	31.5
36	7.60	4.06	3.54	6.57	26.6	22.8	35.4
40	7.60	4.06	3.54	6.57	28.6	26.2	39.4
42	7.60	4.06	3.54	6.57	30.0	29.9	41.3
48	7.60	4.06	3.54	6.57	33.1	32.8	47.2
54	7.60	4.06	3.54	6.57	37.5	39.7	53.1
60	7.60	4.06	3.54	6.57	41.4	45.2	59.0
66	7.60	4.06	3.54	6.57	43.4	50.6	64.9
72	7.60	4.06	3.54	6.57	45.7	54.3	70.8
78	7.60	4.06	3.54	6.57	50.1	61.8	78.7
84	7.60	4.06	3.54	6.57	54.0	67.4	84.6
90	7.60	4.06	3.54	6.57	58.1	73.2	90.5

	Dimension F					Dimension G				
	EN (DIN)			ASME	AS	EN (DIN)			ASME	AS
DN	PN 6	PN 10	PN 16	AWWA		PN 6	PN 10	PN 16	AWWA	
[in]	[in]	[in]	[in]	[in]	[in]	[in]	[in]	[in]	[in]	[in]
14	24.8	25.1	27.6	25.7	25.5	19.3	19.9	20.5	21.0	20.7
15	–	–	–	–	27	–	–	–	–	21.7
16	26.8	27.3	30.0	27.0	27.6	21.3	22.2	22.8	23.5	22.8
18	29.0	29.4	32.4	29.8	29.9	23.4	24.2	25.2	25.0	25.2
20	31.0	31.5	36.5	32.0	32.1	25.4	26.4	28.1	27.5	27.8
24	34.7	35.3	40.4	35.9	36.1	29.7	30.7	33.1	32.0	32.5
28	39.4	40.1	45.1	40.7	40.4	33.9	35.2	35.8	36.5	35.8
30	–	–	–	43.3	43.5	–	–	–	38.7	39.2
32	43.9	44.7	48.8	45.5	45.5	38.4	40.0	40.4	41.7	41.7
36	47.8	48.6	48.8	49.6	49.8	42.3	43.9	44.3	46.0	46.3
40	51.7	52.8	53.4	54.0	53.3	46.3	48.4	49.4	50.7	49.4
42	–	–	–	56.5	–	–	–	–	53.0	–
48	60.8	61.7	62.4	62.9	62.4	55.3	57.3	58.5	59.5	58.7
54	–	–	–	70.6	–	–	–	–	66.3	–
60	–	–	–	77.9	–	–	–	–	73.0	–
66	–	–	–	83.4	–	–	–	–	80.0	–

	Dimension F					Dimension G				
	EN (DIN)			ASME	AS	EN (DIN)			ASME	AS
DN	PN 6	PN 10	PN 16	AWWA		PN 6	PN 10	PN 16	AWWA	
[in]	[in]	[in]	[in]	[in]	[in]	[in]	[in]	[in]	[in]	[in]
72	85.9	87.3	87.6	88.9	–	80.5	83.3	83.9	86.5	–
78	94.6	95.8	96.2	96.6	–	89.2	91.5	92.3	93.0	–
84	–	–	–	104.0	–	–	–	–	99.8	–
90	–	–	–	111.0	–	–	–	–	–	–

Order code for "Housing", option Q "Compact, polycarbonate, inclined" or option R "Compact, aluminum, coated, inclined"

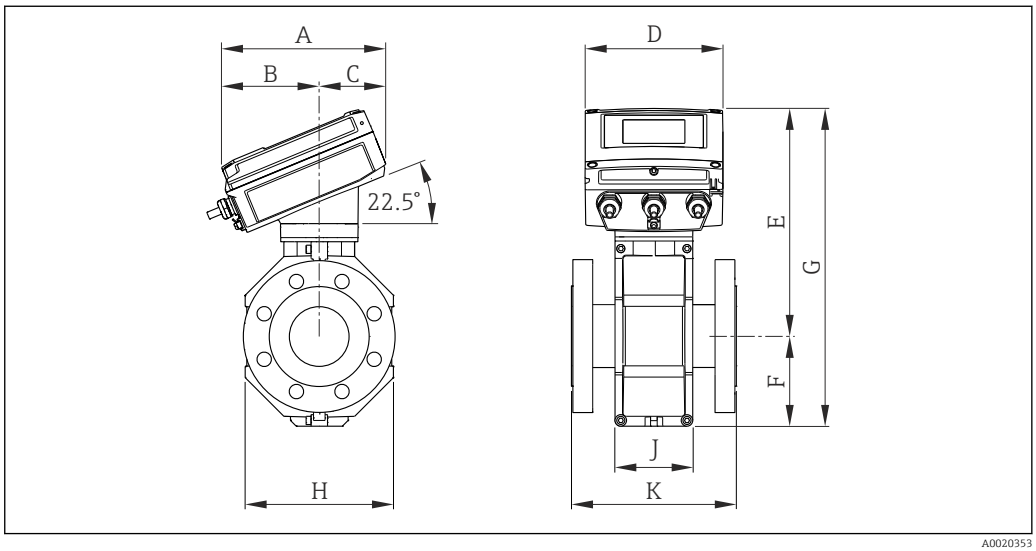

A0020353

DN	A	B	C	D	E	F	G	H	J	K [1]
[in]	[in]	[in]	[in]	[in]	[in]	[in]	[in]	[in]	[in]	[in]
1	7.83	4.69	3.15	6.57	10.5	3.31	13.8	4.72	3.70	7.87
1 ½	7.83	4.69	3.15	6.57	10.5	3.31	13.8	4.72	3.70	7.87
2	7.83	4.69	3.15	6.57	10.5	3.31	13.8	4.72	3.70	7.87
3	7.83	4.69	3.15	6.57	11.5	4.29	15.8	7.09	3.70	7.87
4	7.83	4.69	3.15	6.57	11.5	4.29	15.8	7.09	3.70	9.84
6	7.83	4.69	3.15	6.57	13.1	5.91	19.0	10.2	5.51	11.8
8	7.83	4.69	3.15	6.57	14.1	7.09	21.1	12.8	6.14	13.8
10	7.83	4.69	3.15	6.57	15.0	8.07	23.1	15.8	6.54	17.7
12	7.83	4.69	3.15	6.57	16.0	9.06	25.1	18.1	6.54	19.7

1) The length is independent of the selected pressure rating. Length in accordance with DVGW/ISO.

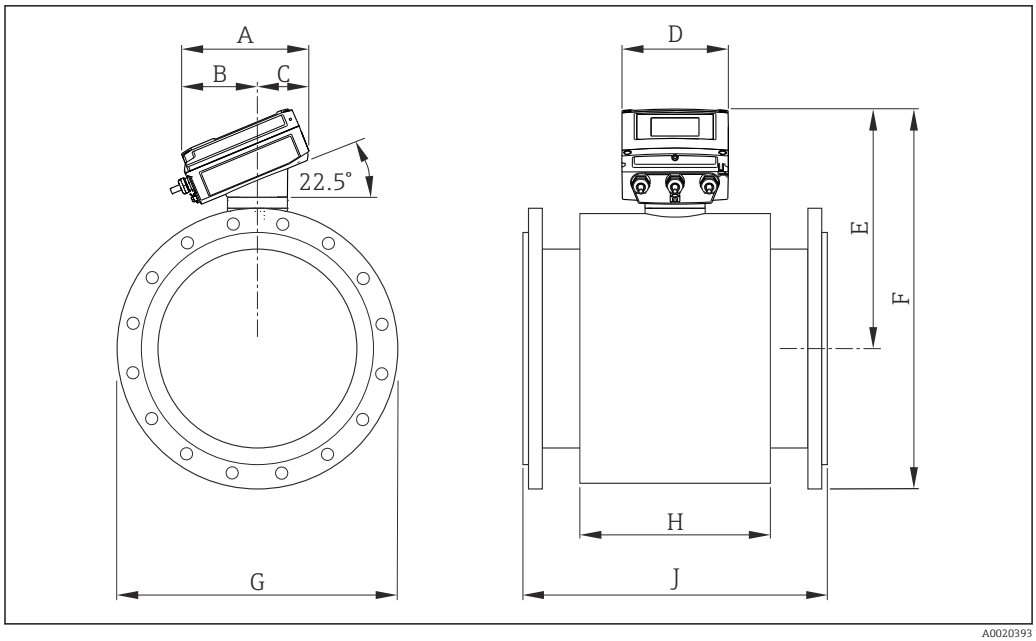

A0020393

DN [in]	A [in]	B [in]	C [in]	D [in]	E [in]	H [in]	J [in]
14	7.83	4.69	3.15	6.57	17.0	11.4	21.6
15	7.83	4.69	3.15	6.57	18.0	11.4	23.6
16	7.83	4.69	3.15	6.57	18.0	11.4	23.6
18	7.83	4.69	3.15	6.57	19.1	11.4	23.6
20	7.83	4.69	3.15	6.57	20.1	11.4	23.6
24	7.83	4.69	3.15	6.57	21.7	11.4	23.6
28	7.83	4.69	3.15	6.57	24.3	16.7	27.6
30	7.83	4.69	3.15	6.57	25.7	17.9	29.5
32	7.83	4.69	3.15	6.57	26.5	19.7	31.5
36	7.83	4.69	3.15	6.57	28.4	22.8	35.4
40	7.83	4.69	3.15	6.57	30.4	26.2	39.4
42	7.83	4.69	3.15	6.57	31.8	29.9	41.3
48	7.83	4.69	3.15	6.57	34.9	32.8	47.2
54	7.83	4.69	3.15	6.57	39.3	39.7	53.1
60	7.83	4.69	3.15	6.57	43.2	45.2	59.0
66	7.83	4.69	3.15	6.57	45.2	50.6	64.9
72	7.83	4.69	3.15	6.57	47.5	54.3	70.8
78	7.83	4.69	3.15	6.57	51.9	61.8	78.7
84	7.83	4.69	3.15	6.57	55.8	67.4	84.6
90	7.83	4.69	3.15	6.57	59.9	73.2	90.5

	Dimension F					Dimension G				
	EN (DIN)			ASME	AS	EN (DIN)			ASME	AS
DN	PN 6	PN 10	PN 16	AWWA		PN 6	PN 10	PN 16	AWWA	
[in]	[in]	[in]	[in]	[in]	[in]	[in]	[in]	[in]	[in]	[in]
14	26.6	26.9	24.3	27.5	27.3	19.3	19.9	20.5	21.0	20.7
15	–	–	–	–	28.8	–	–	–	–	21.7
16	28.6	29.1	26.5	28.8	29.4	21.3	22.2	22.8	23.5	22.8
18	30.8	31.2	28.8	31.6	31.7	23.4	24.2	25.2	25.0	25.2
20	32.8	33.3	31.3	33.8	33.9	25.4	26.4	28.1	27.5	27.8
24	36.5	37.1	35.4	37.7	37.9	29.7	30.7	33.1	32.0	32.5
28	41.2	41.9	39.7	42.5	42.2	33.9	35.2	35.8	36.5	35.8
30	–	–	–	45.1	45.3	–	–	–	38.7	39.2
32	45.7	46.5	43.8	47.3	47.3	38.4	40.0	40.4	41.7	41.7
36	49.6	50.4	47.7	51.4	49.8	42.3	43.9	44.3	46.0	46.3
40	53.5	54.6	52.2	55.8	55.1	46.3	48.4	48.2	50.7	49.4
42	–	–	–	58.3	–	–	–	–	53.0	–
48	62.6	63.5	61.3	64.7	64.2	55.3	57.3	49.4	59.5	58.7
54	–	–	–	72.4	–	–	–	–	66.3	–
60	–	–	–	79.7	–	–	–	–	73.0	–
66	–	–	–	85.2	–	–	–	–	80.0	–
72	87.7	89.1	86.5	90.7	–	80.5	83.3	83.9	86.5	–
78	96.4	97.6	95.1	98.4	–	89.2	91.5	92.3	93.0	–
84	–	–	–	105.8	–	–	–	–	99.8	–
90	–	–	–	112.8	–	–	–	–	–	–

Transmitter remote version

Order code for "Housing", option N "Remote, polycarbonate" or option P "Remote, aluminum coated"

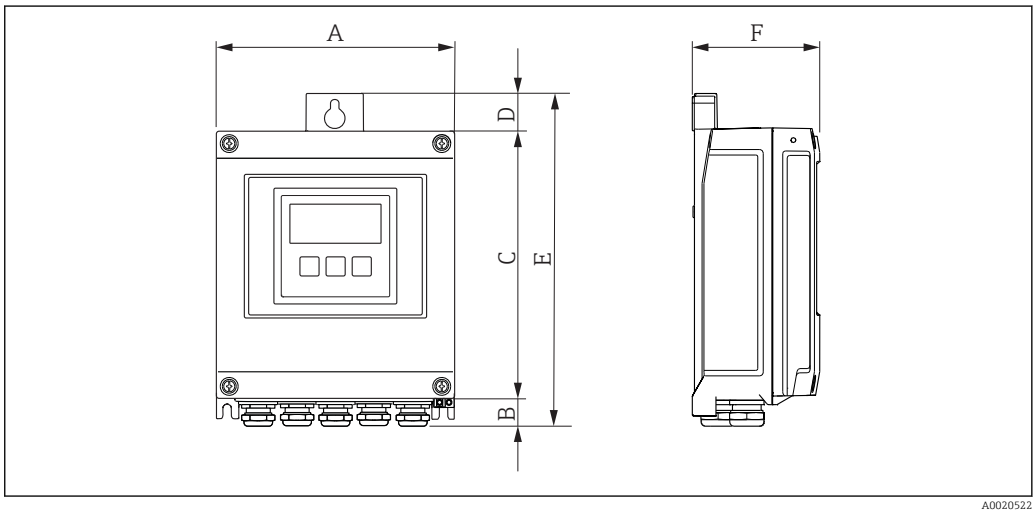

A0020522

A [in]	B [in]	C [in]	D [in]	E [in]	F [in]
6.57	0.83	7.36	0.94	9.13	3.15

Sensor remote version

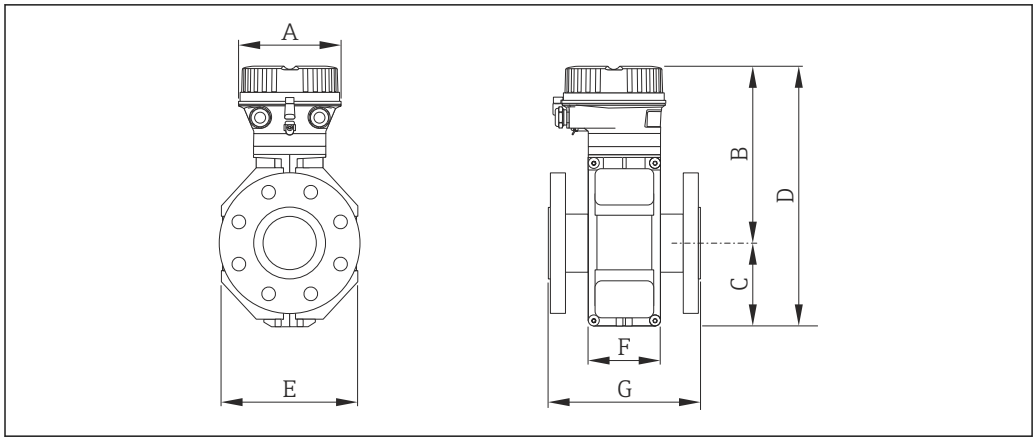

A0017282

DN [in]	A [in]	B [in]	C [in]	D [in]	E [in]	F [in]	G [1)] [in]
1	5.35	8.15	3.31	11.5	4.72	3.70	7.87
1 ½	5.35	8.15	3.31	11.5	4.72	3.70	7.87
2	5.35	8.15	3.31	11.5	4.72	3.70	7.87
3	5.35	9.13	4.29	13.4	7.09	3.70	7.87
4	5.35	9.13	4.29	13.4	7.09	3.70	9.84
6	5.35	10.7	5.91	16.6	10.2	5.51	11.8
8	5.35	11.7	7.09	18.8	12.8	6.14	13.8
10	5.35	12.7	8.07	20.8	15.8	6.14	17.7
12	5.35	13.7	9.06	22.8	18.1	6.54	19.7

1) The length is independent of the selected pressure rating. Length in accordance with DVGW/ISO.

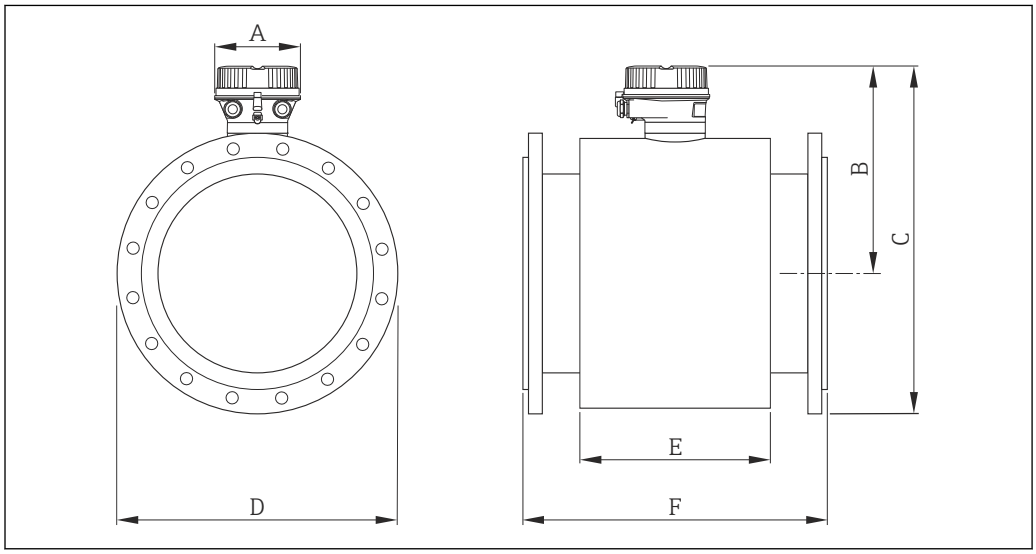

A0017284

DN [in]	A [in]	B [in]	E [in]	F [in]
14	5.35	14.1	11.4	21.6
15	5.35	15.1	11.4	23.6
16	5.35	15.1	11.4	23.6
18	5.35	16.2	11.4	23.6
20	5.35	17.2	11.4	23.6
24	5.35	18.8	11.4	23.6
28	5.35	21.6	16.7	27.6
30	5.35	23.0	17.9	29.5
32	5.35	23.6	19.7	31.5
36	5.35	25.6	22.8	35.4
40	5.35	27.5	26.2	39.4
42	5.35	28.9	29.9	41.3
48	5.35	32.0	32.8	47.2
54	5.35	36.4	39.6	53.1
60	5.35	40.4	45.2	59.0
66	5.35	42.4	50.6	64.9
72	5.35	44.6	54.2	70.8
78	5.35	49.0	61.8	78.7
84	5.35	52.9	67.4	84.6
90	5.35	57.1	73.2	90.5

	Dimension C					Dimension D				
	EN (DIN)			ASME	AS	EN (DIN)			ASME	AS
DN	PN 6	PN 10	PN 16	AWWA		PN 6	PN 10	PN 16	AWWA	
[in]	[in]	[in]	[in]	[in]	[in]	[in]	[in]	[in]	[in]	[in]
14	23.7	24.0	24.3	24.6	24.4	19.3	19.9	20.5	21.0	20.7
15	–	–	–	–	25.9	–	–	–	–	21.7
16	25.8	26.2	26.5	26.9	26.5	21.3	22.2	22.8	23.5	22.8
18	27.9	28.3	28.7	28.7	28.8	23.4	24.2	25.2	25.0	25.2
20	29.9	30.4	31.1	30.9	31.1	25.4	26.4	28.1	27.5	27.8
24	33.7	34.2	35.6	34.8	35.0	29.7	30.7	33.1	32.0	32.5
28	38.5	39.2	39.7	39.8	39.5	33.9	35.2	35.8	36.5	35.8
30	–	–	–	42.4	42.4	–	–	–	38.7	39.2
32	43.0	43.8	44.2	44.6	44.6	38.4	40.0	40.4	41.7	41.7
36	46.9	47.7	48.2	48.7	48.9	42.3	43.9	44.3	46.0	46.3
40	50.8	51.9	52.7	53.1	52.4	46.3	48.4	48.2	50.7	49.4
42	–	–	–	55.6	–	–	–	–	53.0	–
48	59.9	60.8	61.7	62.0	61.5	55.3	57.3	49.4	59.5	58.7
54	–	–	–	69.6	–	–	–	–	66.3	–
60	–	–	–	76.9	–	–	–	–	73.0	–
66	–	–	–	82.4	–	–	–	–	80.0	–

DN [in]	Dimension C					Dimension D				
	EN (DIN)			ASME	AS	EN (DIN)			ASME	AS
	PN 6 [in]	PN 10 [in]	PN 16 [in]	AWWA [in]	[in]	PN 6 [in]	PN 10 [in]	PN 16 [in]	AWWA [in]	[in]
72	84.9	86.3	87.0	87.9	–	80.5	83.3	83.9	86.5	–
78	93.6	94.7	95.6	95.5	–	89.2	91.5	92.3	93.0	–
84	–	–	–	102.8	–	–	–	–	99.8	–
90	–	–	–	110.3	–	–	–	–	106.5	–

Order code for "Sensor option", option CK "IP68, Type 6P, waterproof"

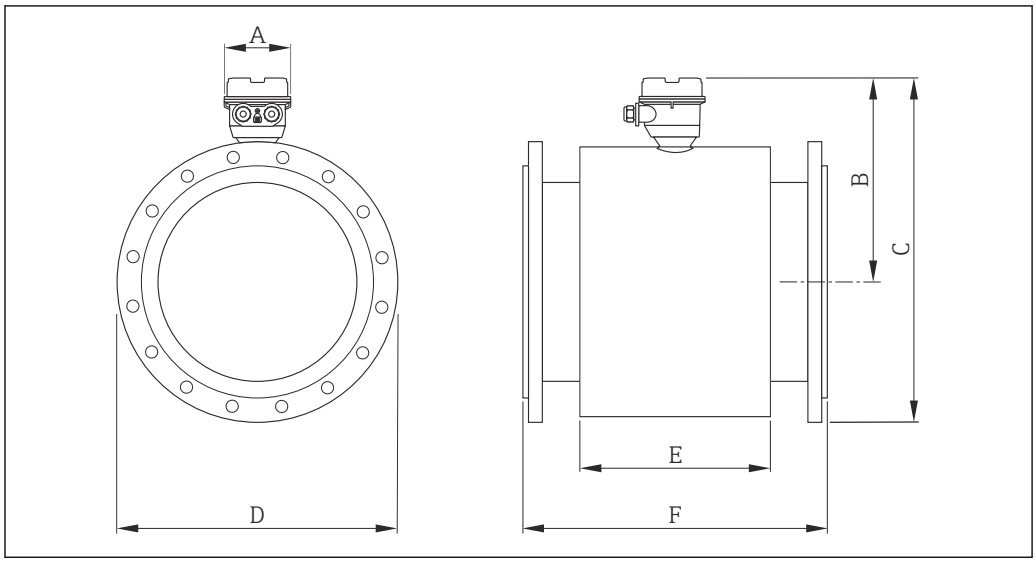

A0020436

DN [in]	A [in]	B [in]	C [in]	D [in]	E [in]	F [in]
14	4.41	14.3	24.3	20.5	11.4	21.6
15	4.41	15.4	–	–	11.4	23.6
16	4.41	15.4	26.5	22.8	11.4	23.6
18	4.41	16.5	28.7	25.2	11.4	23.6
20	4.41	17.4	31.2	28.1	11.4	23.6
24	4.41	19.1	35.6	33.1	11.4	23.6
28	4.41	21.6	39.8	35.8	16.7	27.6
30	4.41	23.0	–	–	17.9	29.5
32	4.41	23.8	44.2	40.4	19.7	31.5
36	4.41	25.8	48.2	44.3	22.8	35.4
40	4.41	27.8	52.7	48.2	26.2	39.4
42	4.41	29.2	–	–	29.9	41.3
48	4.41	32.2	61.7	49.4	32.8	47.2
54	4.41	36.7	–	–	39.6	53.1
60	4.41	40.6	–	–	45.2	59.0
66	4.41	42.6	–	–	50.6	64.9

DN [in]	A [in]	B [in]	C [in]	D [in]	E [in]	F [in]
72	4.41	44.8	87.0	83.9	54.2	70.8
78	4.41	49.2	95.6	92.3	61.8	78.7

Accessories

Ground disks for flange connections

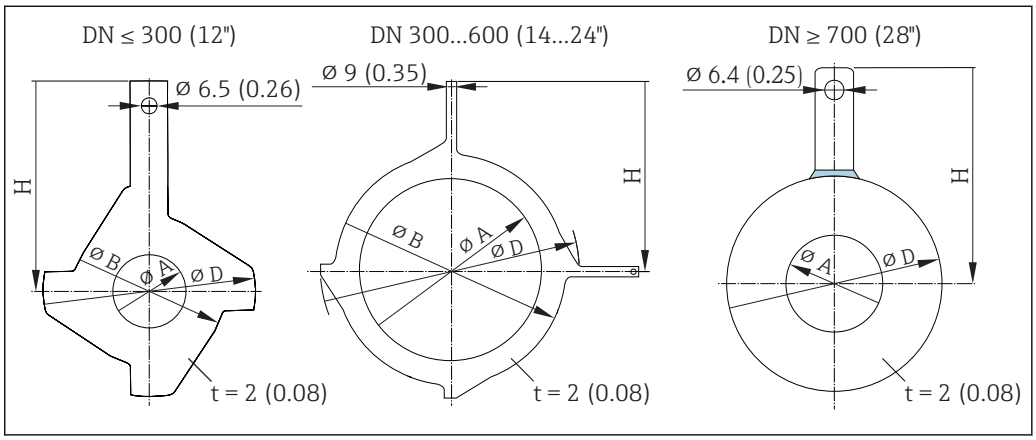

36 *Engineering unit mm (in)*

DN [in]	Pressure rating	A [in]	B [in]	D [in]	H [in]
1	1)	1.02	2.44	3.05	3.44
1 ¼	1)	1.38	3.15	3.44	3.72
1 ½	1)	1.61	3.23	3.98	4.06
2	1)	2.05	3.98	4.55	4.25
2 ½	1)	2.68	4.76	5.18	4.65
3	1)	3.15	5.16	6.08	5.31
4	1)	4.09	6.14	7.34	6.02
5	1)	5.12	7.36	8.13	6.30
6	1)	6.22	8.54	10.1	7.24
8	1)	8.11	10.5	11.3	8.07
10	1)	10.2	12.9	14.1	9.45
12	1)	12.3	14.8	16.3	10.8
14	DIN, PN 6	13.5	16.5	18.9	14.4
14	DIN, PN 10	13.5	15.8	18.9	14.4
14	ASME, Class 150	13.5	15.8	18.9	14.4
16	DIN, PN 6	15.5	18.5	21.3	15.6
16	DIN, PN 10	15.5	18.5	21.3	15.6
16	ASME, Class 150	15.5	18.5	21.3	15.6
18	DIN, PN 6	17.3	20.7	23.0	16.4
18	DIN, PN 10	17.3	21.1	23.0	16.4

DN [in]	Pressure rating	A [in]	B [in]	D [in]	H [in]
18	ASME, Class 150	17.3	21.1	23.0	16.4
20	DIN, PN 6	19.4	23.3	25.6	18.1
20	DIN, PN 10	19.4	23.2	25.6	18.1
20	ASME, Class 150	19.4	23.2	25.6	18.1
24	DIN, PN 6	23.4	27.3	30.2	20.6
24	DIN, PN 10	23.4	27.1	30.2	20.6
24	ASME, Class 150	23.4	27.1	30.2	20.6
28	DIN, PN 6	27.4	–	30.9	18.1
28	DIN, PN 10	27.3	–	32.0	18.9
28	AS, PN 16	27.1	–	31.8	19.3
28	AWWA, Class D	27.3	–	32.8	19.5
30	AWWA, Class D	29.3	–	32.8	20.6
32	DIN, PN 6	31.5	–	35.2	20.5
32	DIN, PN 10	31.3	–	36.2	21.3
32	AS, PN 16	31.1	–	36.0	21.7
32	AWWA, Class D	31.3	–	37.0	22.1
36	DIN, PN 6	35.3	–	39.1	22.4
36	DIN, PN 10	35.2	–	40.2	23.2
36	AS, PN 16	34.9	–	39.9	23.4
36	AWWA, Class D	35.2	–	41.3	24.2
40	DIN, PN 6	39.3	–	43.0	24.4
40	DIN, PN 10	39.2	–	44.4	25.6
40	AS, PN 16	38.9	–	44.5	26.0
40	AWWA, Class D	39.2	–	45.8	26.6
42	AWWA, Class D	41.1	–	48.0	27.7
48	DIN, PN 6	47.4	–	51.6	28.9

1) Ground disks can be used for all the flange standards/pressure ratings which can be supplied in the standard version.

Weight

Compact version

Weight data:
- Including the transmitter
  - Order code for *"Housing"*, option M, Q: 1.3 kg (2.9 lb)
  - Order code for *"Housing"*, option A, R: 2.0 kg (4.4 lb)
- Excluding packaging material

Weight in SI units

Lap joint flange; fixed flange DN ≥ 350

EN 1092-1 (DIN 2501)			
DN [mm]	Order code for "Housing", option M, Q Polycarbonate plastic [1]		
	Weight [kg]		
	PN 6	PN 10	PN 16
25	–	–	6.8
32	–	–	7.5
40	–	–	8.5
50	–	–	9
65	–	–	10
80	–	–	12
100	–	–	14
125	–	–	20
150	–	–	24
200	–	43	44.4
250	–	63	70.2
300	–	68	85.3
350	77	88	103
400	89	104	121
450	102	117	148
500	114	132	189
600	155	180	299
700	213	272	333
800	287	372	460
900	382	474	580
1000	491	613	793
1200	705	914	1312
1400	1124	1480	1904
1600	1519	2195	2696
1800	1999	2836	3685
2000	2775	3506	4644
2200	3063	4170	–
2400	3938	5033	–

1) Values for aluminum transmitter, AlSi10Mg, coated: + 0.7 kg

AS 2129, Table E	
DN [mm]	Weight [kg] Order code for "Housing", option M, Q Polycarbonate plastic [1]
350	99
400	120

AS 2129, Table E	
DN [mm]	Weight [kg] Order code for "Housing", option M, Q Polycarbonate plastic [1]
450	150
500	182
600	279
700	348
750	456
800	516
900	737
1000	854
1200	1366

1) Values for aluminum transmitter, AlSi10Mg, coated: + 0.7 kg

AS 4087, PN 16	
DN [mm]	Weight [kg] Order code for "Housing", option M, Q Polycarbonate plastic [1]
350	99
375	105
400	122
450	140
500	189
600	281
700	384
750	468
800	567
900	737
1000	852
1200	1366

1) Values for aluminum transmitter, AlSi10Mg, coated: + 0.7 kg

Lap joint flange, stamped plate

EN 1092-1 (DIN 2501), PN 10	
DN [mm]	Weight [kg] Order code for "Housing", option M, Q Polycarbonate plastic [1]
25	5.3
32	5.1
40	5.8
50	5
65	6

EN 1092-1 (DIN 2501), PN 10	
DN [mm]	Weight [kg] Order code for "Housing", option M, Q Polycarbonate plastic [1)]
80	7
100	9
125	13
150	17
200	35
250	54
300	55

1) Values for aluminum transmitter, AlSi10Mg, coated: + 0.7 kg

Weight in US units

Lap joint flange; fixed flange DN ≥ 14"

ASME B16.5, Class 150	
DN [in]	Weight [lbs] Order code for "Housing", option M, Q Polycarbonate plastic [1)]
1	11.6
1 ½	12.8
2	20
3	26
4	31
6	53
8	95
10	139
12	150
14	302
16	370
18	421
20	503
24	721

1) Values for aluminum transmitter, AlSi10Mg, coated: + 0.7 kg

AWWA C207, Class D	
DN [in]	Weight [lbs] Order code for "Housing", option M, Q Polycarbonate plastic [1)]
28	608
30	740
32	881
36	1093

AWWA C207, Class D	
DN [in]	Weight [lbs] Order code for "Housing", option M, Q Polycarbonate plastic [1]
40	1463
42	1696
48	2278
54	3166
60	3930
66	5425
72	6295
78	7782
84	8556
90	10681

1) Values for aluminum transmitter, AlSi10Mg, coated: + 0.7 kg

Transmitter remote version

Wall-mount housing

Depends on the material of the wall-mount housing:
- Polycarbonate plastic: 1.3 kg (2.9 lb)
- Aluminum, AlSi10Mg, coated: 2.0 kg (4.4 lb)

Sensor remote version

Weight data:
- Including sensor connection housing
- Excluding the connecting cable
- Excluding packaging material

Weight in SI units

Lap joint flange; fixed flange DN ≥ 350

EN 1092-1 (DIN 2501)			
DN [mm]	Weight [kg]		
	PN 6	PN 10	PN 16
25	–	–	6.8
32	–	–	7.5
40	–	–	8.5
50	–	–	6
65	–	–	7
80	–	–	9
100	–	–	11
125	–	–	16
150	–	–	20
200	–	40	44.4
250	–	60	70.2
300	–	65	85.3

EN 1092-1 (DIN 2501)			
DN [mm]	Weight [kg]		
	PN 6	PN 10	PN 16
350	73	84	101
400	85	100	119
450	98	113	144
500	110	128	185
600	151	176	295
700	209	268	329
800	283	368	456
900	378	470	576
1 000	487	609	789
1 200	701	910	1308
1 400	1120	1 376	1 900
1 600	1 515	2 191	2 692
1 800	1 995	2 832	3 681
2 000	2 771	3 502	4 640
2 200	3 059	4 166	–
2 400	3 934	5 029	–

AS 2129, Table E	
DN [mm]	Weight [kg]
350	95
400	116
450	146
500	178
600	275
700	344
750	452
800	512
900	733
1 000	850
1 200	1 362

AS 4087, PN 16	
DN [mm]	Weight [kg]
350	95
375	101
400	118
450	136
500	185
600	277

AS 4087, PN 16	
DN [mm]	Weight [kg]
700	380
750	464
800	563
900	733
1000	848
1200	1362

Lap joint flange, stamped plate

EN 1092-1 (DIN 2501), PN 10	
DN [mm]	[kg]
25	6.0
32	5.8
40	6.5
50	3
65	4
80	5
100	7
125	11
150	15
200	33
250	52
300	53

Weight in US units

Lap joint flange; fixed flange DN ≥ 14"

ASME B16.5, Class 150	
DN [in]	Weight [lbs]
1	13.2
1 ½	14.3
2	13
3	20
4	24
6	44
8	88
10	132
12	143
14	296
15	–

ASME B16.5, Class 150	
DN [in]	Weight [lbs]
16	364
18	415
20	497
24	715

AWWA C207, Class D	
DN [in]	Weight [lbs]
28	602
30	736
32	875
36	1 087
40	1 457
42	1 690
48	2 272
54	3 160
60	3 924
66	5 419
72	6 289
78	7 776
84	8 550
90	10 675

Measuring tube specification

Nominal diameter		Pressure rating			Measuring tube internal diameter					
		EN (DIN)	ASME AWWA	AS 2129 AS 4087	Hard rubber		Polyurethane		PTFE	
[mm]	[in]				[mm]	[in]	[mm]	[in]	[mm]	[in]
25	1	PN 10/16	Class 150	–	–	–	23.7	0.9	25.3	1.0
32	1 ¼	PN 10/16	Class 150	–	–	–	32.4	1.3	34.0	1.3
40	1 ½	PN 10/16	Class 150	–	–	–	38.3	1.5	39.9	1.6
50	2	PN 10/16	Class 150	–	–	–	50.3	2.0	51.7	2.0
65 [1)]	2 ½	PN 10/16	Class 150	–	–	–	66.1	2.6	67.7	2.7
80	3	PN 10/16	Class 150	–	–	–	78.9	3.1	79.9	3.1
100	4	PN 10/16	Class 150	–	–	–	104.3	4.1	103.8	4.1
125	5	PN 10/16	Class 150	–	–	–	129.7	5.1	129.1	5.1
150	6	PN 10/16	Class 150	–	–	–	158.3	6.2	156.3	6.2
200	8	PN 10/16	Class 150	–	–	–	206.7	8.1	202.1	8.0
250	10	PN 10/16	Class 150	–	–	–	260.6	10.3	256.2	10.1
300	12	PN 10/16	–	–	–	–	311.5	12.3	305.5	12.0
300	12	–	Class 150	–	–	–	309.9	12.2	303.9	12.0
350	14	PN 6	–	–	341	13.4	344	13.5	–	–

Nominal diameter		Pressure rating			Measuring tube internal diameter					
		EN (DIN)	ASME AWWA	AS 2129 AS 4087	Hard rubber		Polyurethane		PTFE	
[mm]	[in]				[mm]	[in]	[mm]	[in]	[mm]	[in]
350	14	PN 10	–	–	341	13.4	344	13.5	–	–
350	14	–	–	Table E, PN 16	337	13.2	340	13.3	–	–
350	14	–	Class 150	–	339	13.3	342	13.4	–	–
375	15	PN 10	–	–	391	15.4	–	–	–	–
375	15	–	–	PN 16	389	15.3	392	15.4	–	–
400	16	PN 6	–	–	391	15.4	394	13.5	–	–
400	16	PN 10	–	–	391	15.4	394	13.5	–	–
400	16	–	–	Table E, PN 16	389	15.3	392	13.4	–	–
400	16	–	Class 150	–	387	15.2	390	13.3	–	–
450	18	PN 6	–	–	442	17.4	445	17.5	–	–
450	18	PN 10	–	–	442	17.4	445	17.5	–	–
450	18	–	–	Table E, PN 16	440	17.3	443	17.4	–	–
450	18	–	Class 150	–	436	17.1	439	17.2	–	–
500	20	PN 6	–	–	493	19.4	496	19.5	–	–
500	20	PN 10	–	–	493	19.4	496	19.5	–	–
500	20	–	–	Table E, PN 16	489	19.2	492	19.3	–	–
500	20	–	Class 150	–	487	19.1	490	19.3	–	–
600	24	PN 6	–	–	595	23.4	598	23.5	–	–
600	24	PN 10	–	–	590	23.2	596	23.4	–	–
600	24	–	–	Table E, PN 16	591	23.2	594	23.4	–	–
600	24	–	Class 150	–	585	23.0	588	23.1	–	–
700	28	PN 6	–	–	696	27.4	699	27.5	–	–
700	28	PN 10	–	–	694	27.3	697	27.4	–	–
700	28	–	–	Table E, PN 16	690	27.2	693	27.3	–	–
700	28	–	Class D	–	694	27.3	697	27.4	–	–
750	30	–	–	Table E, PN 16	741	29.2	744	29.3	–	–
750	30	–	Class D	–	743	29.3	746	29.4	–	–
800	32	PN 6	–	–	796	31.3	799	31.5	–	–
800	32	PN 10	–	–	794	31.2	797	31.4	–	–
800	32	–	–	Table E, PN 16	788	31.0	791	31.1	–	–
800	32	–	Class D	–	794	31.3	797	31.4	–	–
900	36	PN 6	–	–	895	35.2	898	35.4	–	–
900	36	PN 10	–	–	893	35.1	896	35.2	–	–
900	36	–	–	Table E, PN 16	889	35.0	892	35.1	–	–
900	36	–	Class D	–	895	35.2	898	35.4	–	–
1000	40	PN 6	–	–	997	39.2	1000	39.3	–	–
1000	40	PN 10	–	–	995	39.1	998	39.3	–	–
1000	40	–	–	Table E, PN 16	991	39.0	994	39.1	–	–
1000	40	–	Class D	–	995	39.1	998	39.3	–	–
1050	42	PN 6	–	–	–	–	–	–	–	–

Nominal diameter		Pressure rating			Measuring tube internal diameter					
		EN (DIN)	ASME AWWA	AS 2129 AS 4087	Hard rubber		Polyurethane		PTFE	
[mm]	[in]				[mm]	[in]	[mm]	[in]	[mm]	[in]
1050	42	PN 10	–	–	–	–	–	–	–	–
1050	42	–	–	Table E, PN 16	–	–	–	–	–	–
1050	42	–	Class D	–	1046	41.2	1049	41.3	–	–
1200	48	PN 6	–	–	1201	47.3	1204	47.4	–	–
1200	48	PN 10	–	–	1199	47.2	1202	47.3	–	–
1200	48	–	–	Table E, PN 16	1191	46.9	1194	47.0	–	–
1200	48	–	Class D	–	1195	47.0	1198	47.2	–	–
–	54	–	Class D	–	1345	53.8	–	–	–	–
1400	–	PN 6	–	–	1401	55.1	–	–	–	–
1400	–	PN 10	–	–	1394	5578	–	–	–	–
–	60	–	Class D	–	1498	59.9	–	–	–	–
1600	–	PN 6	–	–	1599	62.9	–	–	–	–
1600	–	PN 10	–	–	1590	63.6	–	–	–	–
–	66	–	Class D	–	1646	65.8	1650	64.9	–	–
1800	72	PN 6	–	–	1799	70.8	1802	70.9	–	–
1800	72	PN 10	–	–	1790	71.6	1794	70.6	–	–
1800	72	–	Class D	–	1790	71.6	1794	70.6	–	–
2000	78	PN 6	–	–	1995	78.5	–	–	–	–
2000	78	PN 10	–	–	1990	79.6	–	–	–	–
2000	78	–	Class D	–	1986	79.4	–	–	–	–
–	84	–	Class D	–	2099	84.0	–	–	–	–
2200	–	PN 6	–	–	2194	87.8	–	–	–	–
2200	–	PN 10	–	–	2186	87.4	–	–	–	–
–	90	–	Class D	–	2246	89.8	–	–	–	–
2400	–	PN 6	–	–	2391	94.1	–	–	–	–
2400	–	PN 10	–	–	2386	95.4	–	–	–	–

1) Designed acc. to EN 1092-1 (not to DIN 2501)

Materials

Transmitter housing

Compact version, standard

- Order code for "Housing", option **A** "Compact, aluminum coated": Aluminum, AlSi10Mg, coated
- Order code for "Housing", option **M**: polycarbonate plastic
- Window material:
  - For order code for "Housing", option **A**: glass
  - For order code for "Housing", option **M**: plastic

Compact version, inclined

- Order code for "Housing", option **R** "Compact, aluminum coated": Aluminum, AlSi10Mg, coated
- Order code for "Housing", option **Q**: polycarbonate plastic
- Window material:
  - For order code for "Housing", option **R**: glass
  - For order code for "Housing", option **Q**: plastic

Remote version (wall-mount housing)

- Order code for "Housing", option **P** "Compact, aluminum coated": Aluminum, AlSi10Mg, coated
- Order code for "Housing", option **N**: polycarbonate plastic
- Window material:
  - For order code for "Housing", option **P**: glass
  - For order code for "Housing", option **N**: plastic

Cable entries/cable glands

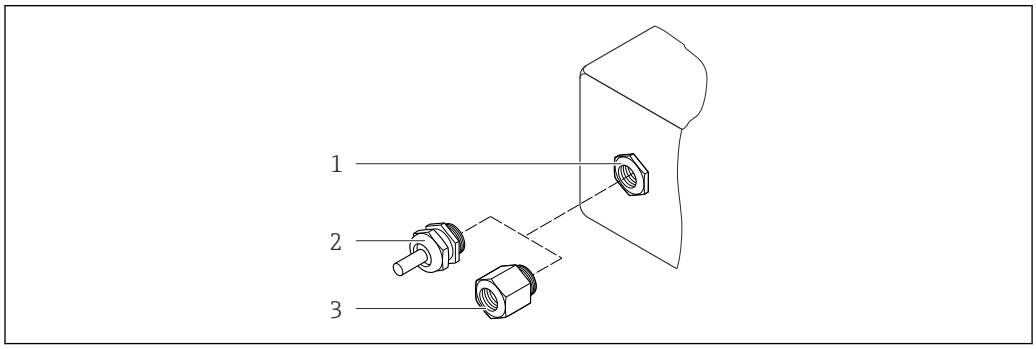

A0020640

37 Possible cable entries/cable glands

1 Female thread M20 × 1.5
2 Cable gland M20 × 1.5
3 Adapter for cable entry with internal thread G ½" or NPT ½"

Compact and remote versions and sensor connection housing

Cable entry/cable gland	Material
Cable gland M20 × 1.5	Plastic
Remote version: cable gland M20 × 1.5 ▪ Option CK "IP68, Type 6P, waterproof" ▪ Option of reinforced connecting cable	▪ Sensor connection housing: Nickel-plated brass ▪ Transmitter wall-mount housing: Plastic
Adapter for cable entry with internal thread G ½" or NPT ½"	Nickel-plated brass

Device plug

Electrical connection	Material
Plug M12x1	▪ Socket: Stainless steel, 1.4404 (316L) ▪ Contact housing: Polyamide ▪ Contacts: Gold-plated brass

Connecting cable for remote version

Electrode and coil current cable
- Standard cable: PVC cable with copper shield
- Reinforced cable: PVC cable with copper shield and additional steel wire braided jacket

Sensor housing

- DN 25 to 300 (1 to 12"): aluminum, AlSi10Mg, coated
- DN 350 to 2400 (14 to 90"): carbon steel with protective varnish

Sensor connection housing

- Aluminum, AlSi10Mg, coated
- Option for order code for "Sensor option", option **CK**:
  Polycarbonate for DN 350 to 2 400 mm (13.8 to 94.5 in) for option IP68

Measuring tubes

- DN 25 to 300 (1 to 12"): stainless steel, 1.4301/1.4306/304L
- DN 350 to 1200 (14 to 48"): stainless steel, 1.4301/1.4307/304
- DN 1350 to 2400 (54 to 90"): stainless steel, 1.4301/1.4307

Liner

- DN 25 to 300 (1 to 12"): PTFE
- DN 25 to 1200 (1 to 48"): polyurethane
- DN 350 to 2400 (14 to 90"): hard rubber

Electrodes

- Stainless steel, 1.4435 (316L)
- Alloy C22, 2.4602 (UNS N06022)

Process connections

EN 1092-1 (DIN 2501)

DN 25 to 300:
- Fixed flange:
  - Stainless steel, 1.4306/1.4404/1.4571/F316L
  - Carbon steel, A105/E250C/S235JRG2
- Lap joint flange, stamped plate:
  - Stainless steel, 1.4301 similar to 304
  - Carbon steel, S235JRG2 similar to 1.0038 (S235JR+AR)
- DN 350 to 2400:
  Carbon steel, P245GH
- DN 350 to 600:
  Stainless steel ,1.4571
- DN 700 to 1000:
  Stainless steel ,1.4404

ASME B16.5

DN 25 to 300 (1 to 12"):
Fixed flange:
- Stainless steel, F316L similar to 1.4404
- Carbon steel, A105 similar to 1.0432

DN 350 to 600 (14 to 24"):
Carbon steel, A105
Stainless steel, F316/F316L

AWWA C207

- DN 48":
  Carbon steel, A105/A181/P265GH/A181 Class 70/IS 2062/E250C/P265GH/S275JR
- DN 54 to 90":
  Carbon steel, A105/A181/P265GH/A181 Class 70/IS 2062/E250C/S275JR

AS 2129

Carbon steel, A105/E250C/P235GH/P265GH/S235JRG2

AS 4087

Carbon steel, A105/P265GH/S275JRG2

Seals

As per DIN EN 1514-1, form IBC

Accessories

Display protection

Stainless steel, 1.4301 (304L)

Ground disks

- Stainless steel, 1.4435 (316L)
- Alloy C22, 2.4602 (UNS N06022)

Fitted electrodes

Measurement, reference and empty pipe detection electrodes available as standard with:
- 1.4435 (316L)
- Alloy C22, 2.4602 (UNS N06022)

Process connections

- EN 1092-1
  - DN ≤ 300: lap joint flange (PN 10/16), lap joint flange, stamped plate (PN 10) = form A
  - DN ≥ 350: fixed flange (PN 6/10/16) = flat face
- ASME B16.5
  - DN ≤ 300 (12"): lap joint flange (Class 150)
  - DN ≥ 350 (14"): fixed flange (Class 150)
- AWWA C207
  DN 48 to 90": fixed flange (Class D)
- AS 2129
  DN 350 to 1200: fixed flange (Table E)
- AS 4087
  DN 350 to 1200: fixed flange (PN 16)

All carbon steel lap joint flanges are supplied with a hot-dip galvanized finish.

For information on the different materials used in the process connections → 📄 75

Surface roughness

Electrodes with 1.4435 (316L); Alloy C22, 2.4602 (UNS N06022):
≤ 0.3 to 0.5 µm (11.8 to 19.7 µin)
(All data relate to parts in contact with fluid)

Operability

Operating concept

Operator-oriented menu structure for user-specific tasks
- Commissioning
- Operation
- Diagnostics
- Expert level

Fast and safe commissioning
- Guided menus ("Make-it-run" wizards) for applications
- Menu guidance with brief descriptions of the individual parameter functions
- Device access via Web server or SmartBlue app → 📄 87
- WLAN access to the device via mobile handheld terminal, tablet or smart phone

Reliable operation
- Operation in local language
- Uniform operating philosophy applied to device and operating tools
- If replacing electronic modules, transfer the device configuration via the integrated memory (HistoROM backup) which contains the process and measuring device data and the event logbook. No need to reconfigure.

Efficient diagnostics increase measurement availability
- Troubleshooting measures can be called up via the device and in the operating tools
- Diverse simulation options, logbook for events that occur and optional line recorder functions

Languages

Can be operated in the following languages:
- Via local operation:
  English, German, French, Spanish, Italian, Dutch, Portuguese, Polish, Russian, Turkish, Chinese, Japanese, Bahasa (Indonesian), Vietnamese, Czech, Swedish
- Via "FieldCare", "DeviceCare" operating tool:
  English, German, French, Spanish, Italian, Chinese, Japanese
- Via Web browser (only available for device versions with HART, PROFIBUS DP and EtherNet/IP):
  English, German, French, Spanish, Italian, Dutch, Portuguese, Polish, Russian, Turkish, Chinese, Japanese, Bahasa (Indonesian), Vietnamese, Czech, Swedish

Local display

Via display module

Two display modules are available:
- Standard:
  4-line, illuminated, graphic display; touch control
- Optionally via order code for "Display", option **W1** "WLAN display":
  4-line, illuminated, graphic display; touch control + WLAN

Information about WLAN interface → 80

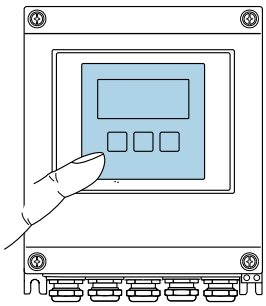

A0032074

38 Operation with touch control

Display elements

- 4-line, illuminated, graphic display
- White background lighting; switches to red in event of device errors
- Format for displaying measured variables and status variables can be individually configured
- Permitted ambient temperature for the display: −20 to +60 °C (−4 to +140 °F)
  The readability of the display may be impaired at temperatures outside the temperature range.

Operating elements

- External operation via touch control (3 optical keys) without opening the housing: ⊞, ⊟, E
- Operating elements also accessible in the various zones of the hazardous area

Remote operation

Via HART protocol

This communication interface is available in device versions with a HART output.

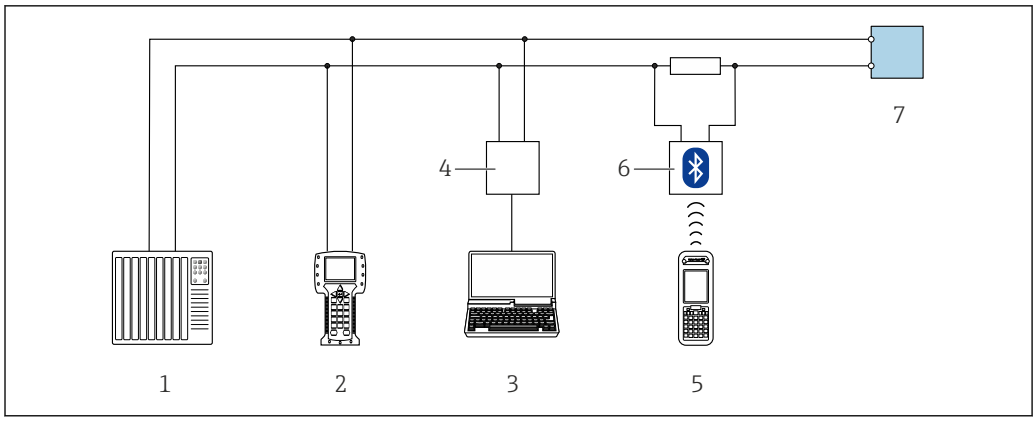

39 Options for remote operation via HART protocol

1 *Control system (e.g. PLC)*
2 *Field Communicator 475*
3 *Computer with operating tool (e.g. FieldCare, AMS Device Manager, SIMATIC PDM)*
4 *Commubox FXA195 (USB)*
5 *Field Xpert SFX350 or SFX370*
6 *VIATOR Bluetooth modem with connecting cable*
7 *Transmitter*

Via PROFIBUS DP network

This communication interface is available in device versions with PROFIBUS DP.

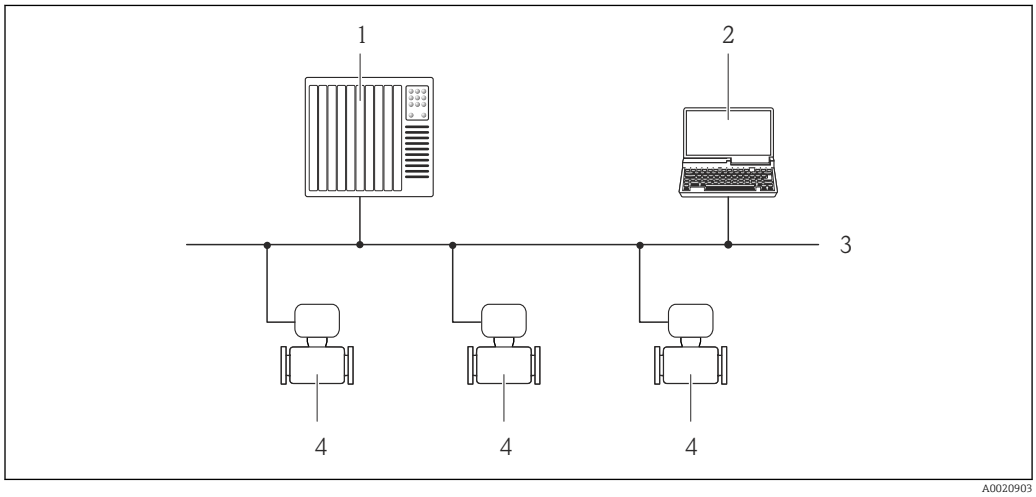

40 Options for remote operation via PROFIBUS DP network

1 *Automation system*
2 *Computer with PROFIBUS network card*
3 *PROFIBUS DP network*
4 *Measuring device*

Via Modbus RS485 protocol

This communication interface is available in device versions with a Modbus-RS485 output.

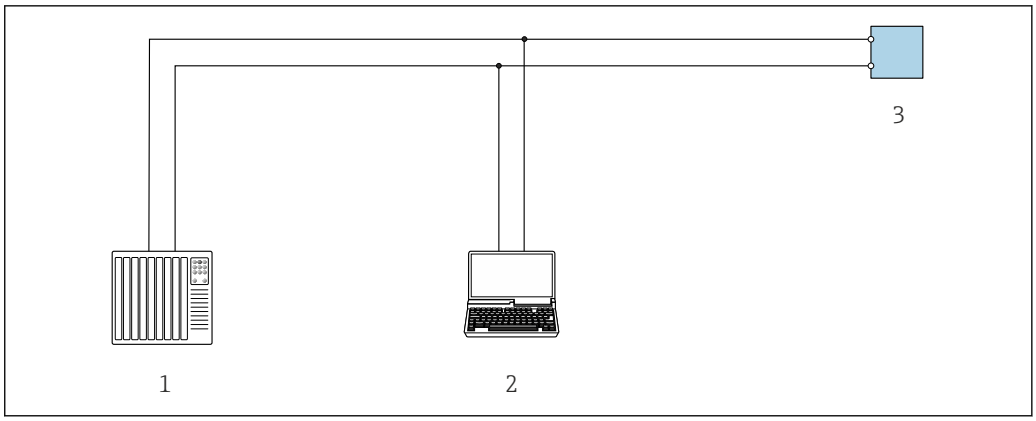

41 Options for remote operation via Modbus-RS485 protocol (active)

1 *Control system (e.g. PLC)*
2 *Computer with Web browser (e.g. Internet Explorer) for accessing the integrated device Web server or with operating tool (e.g. FieldCare, DeviceCare) with COM DTM "CDI Communication TCP/IP" or Modbus DTM*
3 *Transmitter*

Via EtherNet/IP network

This communication interface is available in device versions with EtherNet/IP.

Star topology

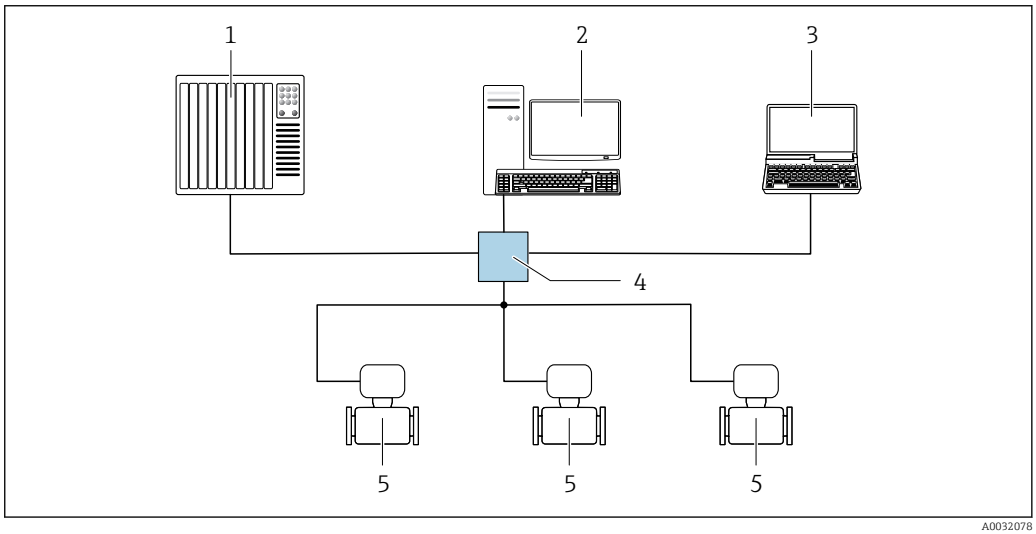

42 Options for remote operation via EtherNet/IP network: star topology

1 *Automation system, e.g. "RSLogix" (Rockwell Automation)*
2 *Workstation for measuring device operation: with Custom Add-On Profile for "RSLogix 5000" (Rockwell Automation) or with Electronic Data Sheet (EDS)*
3 *Computer with Web browser (e.g. Internet Explorer) for accessing the integrated device Web server or computer with operating tool (e.g. FieldCare, DeviceCare) with COM DTM "CDI Communication TCP/IP"*
4 *Ethernet switch*
5 *Measuring device*

Service interface

Via service interface (CDI-RJ45)

This communication interface is present in the following device version:
- Order code for "Output", option **H**: 4-20/0-20 mA HART, pulse/frequency/switch output
- Order code for "Output", option **I**: 4-20/0-20 mA HART, pulse/frequency/switch output, status input
- Order code for "Output", option **L**: PROFIBUS DP
- Order code for "Output", option **N**: EtherNet/IP
- Order code for "Output", option **M**: Modbus RS485

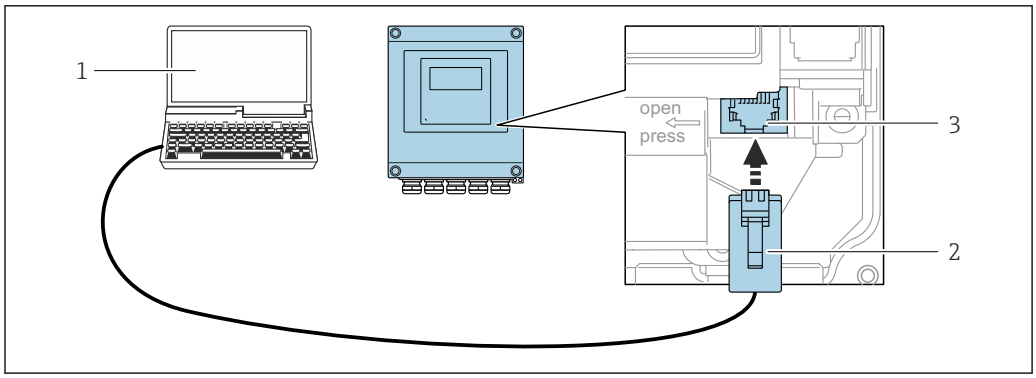

43 Connection via service interface (CDI-RJ45)

1 *Computer with Web browser (e.g. Microsoft Internet Explorer, Microsoft Edge) for accessing the integrated device Web server or with "FieldCare", "DeviceCare" operating tool with COM DTM "CDI Communication TCP/IP" or Modbus DTM*
2 *Standard Ethernet connecting cable with RJ45 plug*
3 *Service interface (CDI-RJ45) of the measuring device with access to the integrated Web server*

Via WLAN interface

The optional WLAN interface is available on the following device version:
Order code for "Display", option **W1** "WLAN display":
4-line, illuminated, graphic display; touch control + WLAN

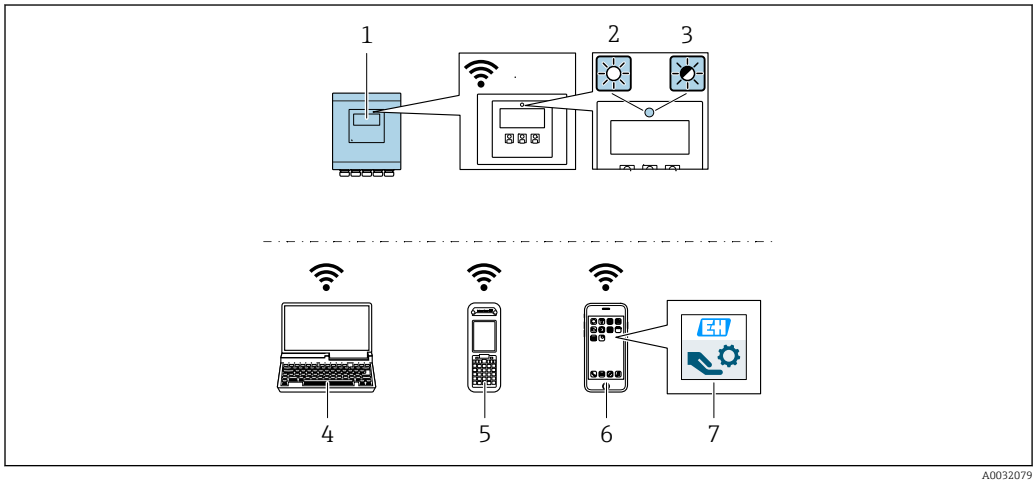

1 *Transmitter with integrated WLAN antenna*
2 *LED lit constantly: WLAN reception is enabled on measuring device*
3 *LED flashing: WLAN connection established between operating unit and measuring device*
4 *Computer with WLAN interface and Web browser (e.g. Microsoft Internet Explorer, Microsoft Edge) for accessing the integrated device Web server or with operating tool (e.g. FieldCare, DeviceCare)*
5 *Mobile handheld terminal with WLAN interface and Web browser (e.g. Microsoft Internet Explorer, Microsoft Edge) for accessing the integrated device Web server or operating tool (e.g. FieldCare, DeviceCare)*
6 *Smartphone or tablet*
7 *SmartBlue App*

Function	WLAN: IEEE 802.11 b/g (2.4 GHz) ▪ Access point with DHCP server (default setting) ▪ Network
Encryption	WPA2-PSK/AES 128 bit
Configurable WLAN channels	1 to 11
Degree of protection	IP67

Available antennas	▪ Internal antenna ▪ External antenna (optional) In the event of poor transmission/reception conditions at the place of installation. Available as an accessory . Only one antenna active in each case!
Max. range	50 m (164 ft)
Materials: External WLAN antenna	▪ Antenna: ASA plastic (acrylic ester-styrene-acrylonitrile) and nickel-plated brass ▪ Adapter: Stainless steel and nickel-plated brass ▪ Cable: Polyethylene ▪ Connector: Nickel-plated brass ▪ Angle bracket: Stainless steel

Supported operating tools

Different operating tools can be used for local or remote access to the measuring device. Depending on the operating tool used, access is possible with different operating units and via a variety of interfaces.

Supported operating tools	Operating unit	Interface	Additional information
Web browser	Notebook, PC or tablet with Web browser	▪ CDI-RJ45 service interface ▪ WLAN interface ▪ Ethernet-based fieldbus (EtherNet/IP)	Special Documentation for device
DeviceCare SFE100	Notebook, PC or tablet with Microsoft Windows system	▪ CDI-RJ45 service interface ▪ WLAN interface ▪ Fieldbus protocol	→ 🗎 87
FieldCare SFE500	Notebook, PC or tablet with Microsoft Windows system	▪ CDI-RJ45 service interface ▪ WLAN interface ▪ Fieldbus protocol	→ 🗎 87
Device Xpert	Field Xpert SFX 100/350/370	HART and FOUNDATION Fieldbus fieldbus protocol	Operating Instructions BA01202S Device description files: Use update function of handheld terminal

Other operating tools based on FDT technology with a device driver such as DTM/iDTM or DD/EDD can be used for device operation. These operating tools are available from the individual manufacturers. Integration into the following operating tools, among others, is supported:

- FactoryTalk AssetCentre (FTAC) by Rockwell Automation → www.rockwellautomation.com
- Process Device Manager (PDM) by Siemens → www.siemens.com
- Asset Management Solutions (AMS) by Emerson → www.emersonprocess.com
- FieldCommunicator 375/475 by Emerson → www.emersonprocess.com
- Field Device Manager (FDM) by Honeywell → www.honeywellprocess.com
- FieldMate by Yokogawa → www.yokogawa.com
- PACTWare → www.pactware.com

The associated device description files are available at: www.endress.com → Downloads

Web server

Thanks to the integrated Web server, the device can be operated and configured via a Web browser and via a service interface (CDI-RJ45) or via a WLAN interface. The structure of the operating menu is the same as for the local display. In addition to the measured values, status information on the device is also displayed and allows the user to monitor the status of the device. Furthermore the device data can be managed and the network parameters can be configured.

A device that has a WLAN interface (can be ordered as an option) is required for the WLAN connection: order code for "Display", option **W1** "WLAN display": 4-line, illuminated; touch control + WLAN. The device acts as an Access Point and enables communication by computer or a mobile handheld terminal.

Supported functions
Data exchange between the operating unit (such as a notebook for example) and the measuring device:
- Upload the configuration from the measuring device (XML format, configuration backup)
- Save the configuration to the measuring device (XML format, restore configuration)
- Export event list (.csv file)
- Export parameter settings (.csv file or PDF file, document the measuring point configuration)
- Export the Heartbeat verification log (PDF file, only available with the "Heartbeat Verification" application package)
- Flash firmware version for device firmware upgrade, for instance
- Download driver for system integration
- Visualize up to 1000 saved measured values (only available with the **Extended HistoROM** application package → 🗎 85)

Webserver special documentation

HistoROM data management

The measuring device features HistoROM data management. HistoROM data management comprises both the storage and import/export of key device and process data, making operation and servicing far more reliable, secure and efficient.

When the device is delivered, the factory settings of the configuration data are stored as a backup in the device memory. This memory can be overwritten with an updated data record, for example after commissioning.

Additional information on the data storage concept

There are different types of data storage units in which device data are stored and used by the device:

	Device memory	T-DAT	S-DAT
Available data	▪ Device firmware package ▪ Driver for system integration e.g.: – DD for HART – GSD for PROFIBUS DP – EDS for EtherNet/IP	▪ Event history, such as diagnostic events ▪ Measured value memory ("Extended HistoROM" order option) ▪ Current parameter data record (used by firmware at run time) ▪ Maximum indicators (min/max values) ▪ Totalizer values	▪ Sensor data: diameter etc. ▪ Serial number ▪ User-specific access code (to use the "Maintenance" user role) ▪ Calibration data ▪ Device configuration (e.g. SW options, fixed I/O or multi I/O)
Storage location	Fixed on the user interface board in the connection compartment	Can be plugged into the user interface board in the connection compartment	In the sensor plug in the transmitter neck part

Data backup

Automatic
- The most important device data (sensor and transmitter) are automatically saved in the DAT modules
- If the transmitter or measuring device is replaced: once the T-DAT containing the previous device data has been exchanged, the new measuring device is ready for operation again immediately without any errors
- If the sensor is replaced: once the sensor has been replaced, new sensor data are transferred from the S-DAT in the measuring device and the measuring device is ready for operation again immediately without any errors

Data transfer

Manual
- Transfer of a device configuration to another device using the export function of the specific operating tool, e.g. with FieldCare, DeviceCare or Web server: to duplicate the configuration or to store in an archive (e.g. for backup purposes)
- Transmission of the drivers for system integration via Web server, e.g.:
  - GSD for PROFIBUS DP
  - EDS for EtherNet/IP

Event list

Automatic
- Chronological display of up to 20 event messages in the events list
- If the **Extended HistoROM** application package (order option) is enabled: up to 100 event messages are displayed in the events list along with a time stamp, plain text description and remedial measures
- The events list can be exported and displayed via a variety of interfaces and operating tools e.g. DeviceCare, FieldCare or Web server

Data logging

Manual
If the **Extended HistoROM** application package (order option) is enabled:
- Record up to 1 000 measured values via 1 to 4 channels
- User configurable recording interval
- Record up to 250 measured values via each of the 4 memory channels
- Export the measured value log via a variety of interfaces and operating tools e.g. FieldCare, DeviceCare or web server

Certificates and approvals

CE mark

The measuring system is in conformity with the statutory requirements of the applicable EU Directives. These are listed in the corresponding EU Declaration of Conformity along with the standards applied.

Endress+Hauser confirms successful testing of the device by affixing to it the CE mark.

C-Tick symbol

The measuring system meets the EMC requirements of the "Australian Communications and Media Authority (ACMA)".

Ex approval

The measuring device is certified for use in hazardous areas and the relevant safety instructions are provided in the separate "Safety Instructions" (XA) document. Reference is made to this document on the nameplate.

The separate Ex documentation (XA) containing all the relevant explosion protection data is available from your Endress+Hauser sales center.

ATEX, IECEx

Currently, the following versions for use in hazardous areas are available:

Drinking water approval

- ACS
- KTW/W270
- NSF 61
- WRAS BS 6920

HART certification

HART interface

The measuring device is certified and registered by the FieldComm Group. The measuring system meets all the requirements of the following specifications:
- Certified according to HART 7
- The device can also be operated with certified devices of other manufacturers (interoperability)

Certification PROFIBUS

PROFIBUS interface

The measuring device is certified and registered by the PNO (PROFIBUS User Organization Organization). The measuring system meets all the requirements of the following specifications:
- Certified in accordance with PROFIBUS PA Profile 3.02
- The device can also be operated with certified devices of other manufacturers (interoperability)

EtherNet/IP certification

The measuring device is certified and registered by the ODVA (Open Device Vendor Association). The measuring system meets all the requirements of the following specifications:
- Certified in accordance with the ODVA Conformance Test
- EtherNet/IP Performance Test
- EtherNet/IP PlugFest compliance
- The device can also be operated with certified devices of other manufacturers (interoperability)

Radio approval

The measuring device has radio approval.

For detailed information on the radio approval, see the Special Documentation → 📄 89

Other standards and guidelines

- EN 60529
  Degrees of protection provided by enclosures (IP code)
- EN 61010-1
  Safety requirements for electrical equipment for measurement, control and laboratory use - general requirements
- IEC/EN 61326
  Emission in accordance with Class A requirements. Electromagnetic compatibility (EMC requirements).
- ANSI/ISA-61010-1 (82.02.01): 2004
  Safety Requirements for Electrical Equipment for Measurement, Control and Laboratory Use - Part 1 General Requirements
- CAN/CSA-C22.2 No. 61010-1-04
  Safety Requirements for Electrical Equipment for Measurement, Control and Laboratory Use - Part 1 General Requirements
- NAMUR NE 21
  Electromagnetic compatibility (EMC) of industrial process and laboratory control equipment
- NAMUR NE 32
  Data retention in the event of a power failure in field and control instruments with microprocessors
- NAMUR NE 43
  Standardization of the signal level for the breakdown information of digital transmitters with analog output signal.
- NAMUR NE 53
  Software of field devices and signal-processing devices with digital electronics
- NAMUR NE 105
  Specifications for integrating fieldbus devices in engineering tools for field devices
- NAMUR NE 107
  Self-monitoring and diagnosis of field devices
- NAMUR NE 131
  Requirements for field devices for standard applications

Ordering information

Detailed ordering information is available from the following sources:
- In the Product Configurator on the Endress+Hauser website: www.endress.com -> Click "Corporate" -> Select your country -> Click "Products" -> Select the product using the filters and search field -> Open product page -> The "Configure" button to the right of the product image opens the Product Configurator.
- From your Endress+Hauser Sales Center: www.addresses.endress.com

Product Configurator - the tool for individual product configuration
- Up-to-the-minute configuration data
- Depending on the device: Direct input of measuring point-specific information such as measuring range or operating language
- Automatic verification of exclusion criteria
- Automatic creation of the order code and its breakdown in PDF or Excel output format
- Ability to order directly in the Endress+Hauser Online Shop

Product generation index

Release date	Product root	Modification
01.07.2012	5L4B	Original
01.11.2016	5L4C	▪ Web server: current version ▪ Logbook: current concept, including Parameter Change ▪ Upload/download: current concept ▪ Heartbeat Technology: new hardware, diagnostics, events ▪ Security concept: encrypted password transmission ▪ WLAN

More information is available from your Sales Center or at:
www.service.endress.com → Downloads

Application packages

Many different application packages are available to enhance the functionality of the device. Such packages might be needed to address safety aspects or specific application requirements.

The application packages can be ordered with the device or subsequently from Endress+Hauser. Detailed information on the order code in question is available from your local Endress+Hauser sales center or on the product page of the Endress+Hauser website: www.endress.com.

Cleaning

Package	Description
Electrode cleaning circuit (ECC)	The electrode cleaning circuit (ECC) function has been developed to have a solution for applications where magnetite (Fe_3O_4) deposits frequently occur (e.g. hot water). Since magnetite is highly conductive this build up leads to measuring errors and ultimately to the loss of signal. The application package is designed to AVOID build up of highly conductive matter and thin layers (typical of magnetite).

Diagnostics functions

Package	Description
Extended HistoROM	Comprises extended functions concerning the event log and the activation of the measured value memory. Event log: Memory volume is extended from 20 message entries (standard version) to up to 100 entries. Data logging (line recorder): ▪ Memory capacity for up to 1000 measured values is activated. ▪ 250 measured values can be output via each of the 4 memory channels. The recording interval can be defined and configured by the user. ▪ Measured value logs can be accessed via the local display or operating tool e.g. FieldCare, DeviceCare or Web server.

Heartbeat Technology

Package	Description
Heartbeat Verification +Monitoring	**Heartbeat Verification** Meets the requirement for traceable verification to DIN ISO 9001:2008 Chapter 7.6 a) "Control of monitoring and measuring equipment". ▪ Functional testing in the installed state without interrupting the process. ▪ Traceable verification results on request, including a report. ▪ Simple testing process via local operation or other operating interfaces. ▪ Clear measuring point assessment (pass/fail) with high test coverage within the framework of manufacturer specifications. ▪ Extension of calibration intervals according to operator's risk assessment. **Heartbeat Monitoring** Continuously supplies data, which are characteristic of the measuring principle, to an external condition monitoring system for the purpose of preventive maintenance or process analysis. These data enable the operator to: ▪ Draw conclusions - using these data and other information - about the impact process influences (such as corrosion, abrasion, buildup etc.) have on the measuring performance over time. ▪ Schedule servicing in time. ▪ Monitor the process or product quality, e.g. gas pockets.

Accessories

Various accessories, which can be ordered with the device or subsequently from Endress+Hauser, are available for the device. Detailed information on the order code in question is available from your local Endress+Hauser sales center or on the product page of the Endress+Hauser website: www.endress.com.

Device-specific accessories

For the transmitter

Accessories	Description
Display protection	Is used to protect the display against impact or scoring from sand in desert areas. For details, see Special Documentation SD00333F
Connecting cable for remote version	Coil current and electrode cables, various lengths, reinforced cables available on request.
Ground cable	Set, consisting of two ground cables for potential equalization.
Post mounting kit	Post mounting kit for transmitter.
Compact → Remote conversion kit	For converting a compact device version to a remote device version.
Conversion kit Promag 50/53 → Promag 400	For converting a Promag with transmitter 50/53 to a Promag 400.

For the sensor

Accessories	Description
Ground disks	Are used to ground the medium in lined measuring tubes to ensure proper measurement. For details, see Installation Instructions EA00070D

Communication-specific accessories

Accessories	Description
Commubox FXA195 HART	For intrinsically safe HART communication with FieldCare via the USB interface. For details, see "Technical Information" TI00404F

Commubox FXA291	Connects Endress+Hauser field devices with a CDI interface (= Endress+Hauser Common Data Interface) and the USB port of a computer or laptop. For details, see the "Technical Information" document TI405C/07
HART Loop Converter HMX50	Is used to evaluate and convert dynamic HART process variables to analog current signals or limit values. For details, see "Technical Information" TI00429F and Operating Instructions BA00371F
Wireless HART adapter SWA70	Is used for the wireless connection of field devices. The WirelessHART adapter can be easily integrated into field devices and existing infrastructures, offers data protection and transmission safety and can be operated in parallel with other wireless networks with minimum cabling complexity. For details, see Operating Instructions BA00061S
Fieldgate FXA320	Gateway for the remote monitoring of connected 4 to 20 mA measuring devices via a Web browser. For details, see "Technical Information" TI00025S and Operating Instructions BA00053S
Fieldgate FXA520	Gateway for the remote diagnostics and remote configuration of connected HART measuring devices via a Web browser. For details, see "Technical Information" TI00025S and Operating Instructions BA00051S
Field Xpert SFX350	Field Xpert SFX350 is a mobile computer for commissioning and maintenance. It enables efficient device configuration and diagnostics for HART and FOUNDATION Fieldbus devices and can be used in non-hazardous areas. For details, see Operating Instructions BA01202S
Field Xpert SFX370	Field Xpert SFX370 is a mobile computer for commissioning and maintenance. It enables efficient device configuration and diagnostics for HART and FOUNDATION Fieldbus devices and can be used in the non-hazardous area and in the hazardous area. For details, see Operating Instructions BA01202S

Service-specific accessories

Accessories	Description
Applicator	Software for selecting and sizing Endress+Hauser measuring devices: ▪ Choice of measuring devices for industrial requirements ▪ Calculation of all the necessary data for identifying the optimum flowmeter: e.g. nominal diameter, pressure loss, flow velocity and accuracy. ▪ Graphic illustration of the calculation results ▪ Determination of the partial order code, administration, documentation and access to all project-related data and parameters over the entire life cycle of a project. Applicator is available: ▪ Via the Internet: https://wapps.endress.com/applicator ▪ As a downloadable DVD for local PC installation.
W@M	W@M Life Cycle Management Improved productivity with information at your fingertips. Data relevant to a plant and its components is generated from the first stages of planning and during the asset's complete life cycle. W@M Life Cycle Management is an open and flexible information platform with online and on-site tools. Instant access for your staff to current, in-depth data shortens your plant's engineering time, speeds up procurement processes and increases plant uptime. Combined with the right services, W@M Life Cycle Management boosts productivity in every phase. For more information, visit www.endress.com/lifecyclemanagement

FieldCare	FDT-based plant asset management tool from Endress+Hauser. It can configure all smart field units in your system and helps you manage them. By using the status information, it is also a simple but effective way of checking their status and condition. For details, see Operating Instructions BA00027S and BA00059S
DeviceCare	Tool for connecting and configuring Endress+Hauser field devices. For details, see Innovation brochure IN01047S
Commubox FXA291	Connects Endress+Hauser field devices with a CDI interface (= Endress+Hauser Common Data Interface) and the USB port of a computer or laptop. For details, see "Technical Information" TI00405C

System components

Accessories	Description
Memograph M graphic data manager	The Memograph M graphic data manager provides information on all the relevant measured variables. Measured values are recorded correctly, limit values are monitored and measuring points analyzed. The data are stored in the 256 MB internal memory and also on a SD card or USB stick. For details, see "Technical Information" TI00133R and Operating Instructions BA00247R

Supplementary documentation

For an overview of the scope of the associated Technical Documentation, refer to the following:
- The *W@M Device Viewer* : Enter the serial number from the nameplate (www.endress.com/deviceviewer)
- The *Endress+Hauser Operations App*: Enter the serial number from the nameplate or scan the 2-D matrix code (QR code) on the nameplate.

Standard documentation

Brief Operating Instructions

Brief Operating Instructions for the sensor

Measuring device	Documentation code
Proline Promag L	KA01265D

Transmitter Brief Operating Instructions

Measuring device	Documentation code			
	HART	PROFIBUS DP	Modbus RS485	EtherNet/IP
Proline D 400	KA01263D	KA01112D		
Proline L 400		KA01113D		
Proline W 400		KA01114D		

Operating Instructions

Measuring device	Documentation code			
	HART	PROFIBUS DP	Modbus RS485	EtherNet/IP
Promag L 400	BA01062D	BA01233D	BA01230D	BA01213D

Description of device parameters

Measuring device	Documentation code			
	HART	PROFIBUS DP	Modbus RS485	EtherNet/IP
Promag 400	GP01043D	GP01044D	GP01045D	GP01046D

Supplementary device-dependent documentation

Special Documentation

Content	Documentation code
Heartbeat Technology	SD01847D
Display modules A309/A310	SD01793D

Content	Documentation code			
	HART	PROFIBUS DP	Modbus RS485	EtherNet/IP
Web server	SD01811D	SD01813D	SD01812D	SD01814D

Installation Instructions

Contents	Comment
Installation instructions for spare part sets and accessories	Documentation code: specified for each individual accessory .

Registered trademarks

HART®
Registered trademark of the FieldComm Group, Austin, Texas, USA

PROFIBUS®
Registered trademark of the PROFIBUS User Organization, Karlsruhe, Germany

Modbus®
Registered trademark of SCHNEIDER AUTOMATION, INC.

EtherNet/IP™
Trademark of ODVA, Inc.

Microsoft®
Registered trademark of the Microsoft Corporation, Redmond, Washington, USA

www.addresses.endress.com

Endress+Hauser

People for Process Automation