Overview

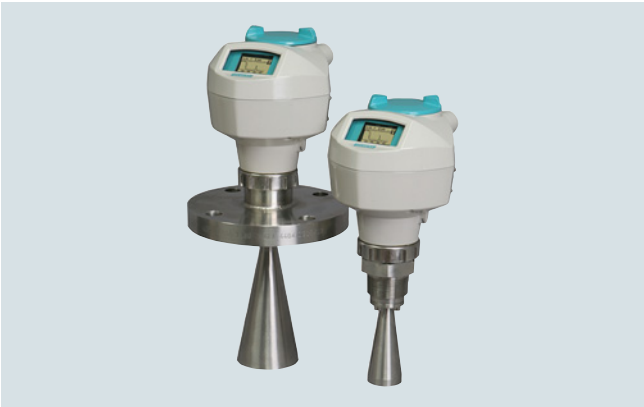

SITRANS LR250 is a 2-wire, 25 GHz pulse radar level transmitter for continuous monitoring of liquids and slurries in storage and process vessels including high temperature and pressure, to a range of 20 m (66 ft).

Benefits

- Graphical local user interface (LUI) makes operation simple with plug-and-play setup using the intuitive Quick Start Wizard
- LUI displays echo profiles for diagnostic support
- 25 GHz high frequency allows for small antennas for easy mounting in nozzles
- Insensitive to mounting location and obstructions, and less sensitive to nozzle interference
- Short blanking distance for improved minimum measuring range to 50 mm (2 inch) from the end of the antenna
- Communication using HART, PROFIBUS PA, or FOUNDATION Fieldbus
- Process Intelligence signal processing for improved measurement reliability and Auto False-Echo Suppression of fixed obstructions
- Programming using infrared Intrinsically Safe handheld programmer or over a network using SIMATIC PDM, Emerson AMS, or Field Device Tools such as PACTware or Fieldcare via SITRANS DTM
- Functional Safety (SIL 2). Device suitable for use in accordance with IEC 61508 and IEC 61511
- 3 mm (0.118 inch) accuracy in accordance with IEC 60770-1
- Suitable for API 2350

Application

SITRANS LR250 includes a graphical local user interface (LUI) that improves setup and operation by including an intuitive Quick Start Wizard, and echo profile displays for diagnostic support. Startup is easy using the Quick Start wizard with a few parameters required for basic operation.

The 25 GHz frequency creates a narrow, focused beam allowing for smaller horn antenna options and decreasing sensitivity to obstructions.

SITRANS LR250's unique design allows safe and simple programming using the Intrinsically Safe handheld programmer without saving to open the instrument's lid.

SITRANS LR250 measures superbly on low dielectric media, and in small vessels, as well as tall and narrow vessels.

- Key Applications: liquid bulk storage tanks, process vessels, vaporous liquids, high temperatures, low dielectric media and applications with functional safety requirements

Configuration

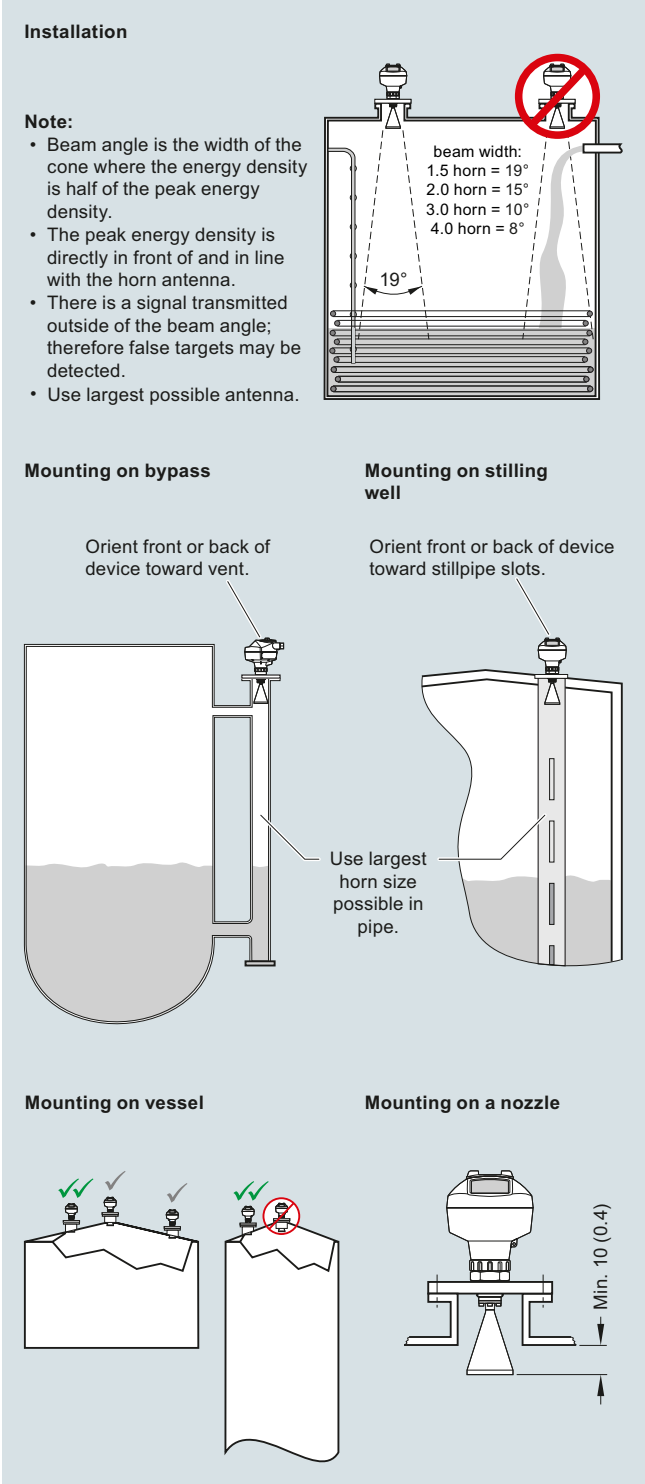

SITRANS LR250 installation, dimensions in mm (inch)

Technical specifications

Mode of operation	
Measuring principle	Radar level measurement
Frequency	K-band (25.0 GHz)
Minimum measuring range	50 mm (2 inch) from end of antenna
Maximum measuring range	20 m (65 ft), antenna dependent
Output	
HART	Version 5.1
• Analog output	4 ... 20 mA
• Accuracy	± 0.02 mA
• Fail-safe	• Programmable as high low or hold (loss of echo) • NE 43 programmable
PROFIBUS PA	Profile 3.01
• Function blocks	2 Analog Input (AI)
FOUNDATION Fieldbus	H1
• Functionality	Basic or LAS
• Version	ITK 5.2.0
• Function blocks	2 Analog Input (AI)
Performance (according to reference conditions IEC60770-1)	
Maximum measured error	3 mm (0.118 inch)
Influence of ambient temperature	< 0.003 %/K
Rated operating conditions	
Installation conditions	
• Location	Indoor/outdoor
Ambient conditions (enclosure)	
• Ambient temperature	-40 ... +80 °C (-40 ... +176 °F)
• Installation category	I
• Pollution degree	4
Medium conditions	
Dielectric constant ε_r	> 1.6, antenna and application dependent
Process temperature	-40 ... +200 °C (-40 ... +392 °F) (at process connection with FKM O-ring) -20 ... +200 °C (-4 ... +392 °F) (at process connection with FFKM O-ring)
Process pressure	Up to 40 bar g (580 psi g), process connection and temperature dependent. See Pressure/Temperature curves for more information
Design	
Enclosure	
• Material	Aluminum, polyester powder-coated
• Cable inlet	2 x M20 x 1.5 or 2 x ½" NPT
Degree of protection	Type 4X/NEMA 4X, Type 6/NEMA 6, IP67, IP68
Weight	< 3 kg (6.6 lb) 3.75 mm (1½ inch) threaded connection with 1½" horn antenna
Display (local)	Graphic local user interface including quick start wizard and echo profile display
Antenna	
• Material	316L stainless steel [optional alloy N06022/2.4602 (Hastelloy C-22 or equivalent)]
• Dimensions (nominal horn sizes)	Standard 1.5 inch (40 mm), 2 inch (48 mm), 3 inch (75 mm), 4 inch (95 mm) horn, and optional 100 mm (4 inch) horn extension
Process connections	
• Process connection	1½", 2" or 3" NPT [(Taper), ANSI/ASME B1.20.1] R 1½", 2" or 3" [(BSPT), EN 10226] G 1½", 2" or 3" [(BSPP), EN ISO 228-1]
• Flange connection	2", 3", 4" (ANSI 150, 300 lb), 50, 80, 100 mm (PN 16, 40, JIS 10K)

Power supply	
4 ... 20 mA/HART	Nominal 24 V DC (max. 30 V DC) with max. 550 Ω
PROFIBUS PA	• 15 mA • Per IEC 61158-2
FOUNDATION Fieldbus	• 20.0 mA • Per IEC 61158-2
Certificates and approvals	
General	$CSA_{US/C}$, CE, FM, RCM
Radio	FCC, Industry Canada, RED, RCM
Hazardous	
• Explosion Proof (Brazil)	INMETRO Ex d ia mb IIC T4 Ga/Gb, Ex ia ta IIIC T100 °C Da
• Increased Safety (Brazil)	INMETRO Ex e ia mb IIC T4 Ga/Gb, Ex ia ta IIIC T100 °C Da
• Intrinsically Safe (Brazil)	INMETRO Ex ia IIC T4 Ga, Ex ia ta IIIC T100 °C Da
• Explosion Proof (Canada/USA)	CSA/FM Class I, Div. 1, Groups A, B, C, D; Class II, Div. 1, Groups E, F, G; Class III T4
• Intrinsically Safe (Canada/USA)	CSA/FM Class I, Div. 1, Groups A, B, C, D; Class II, Div. 1, Groups E, F, G; Class III T4
• Non-incendive (Canada/USA)	CSA/FM Class I, Div. 2, Groups A, B, C, D T5
• Flame Proof/Increased Safety (China)	NEPSI Ex d ia mb IIC T4 Ga/Gb, Ex e ia mb IIC T4 Ga/Gb, Ex iaD tD A20 IP67 T100 °C
• Intrinsically Safe (China)	NEPSI Ex ia IIC T4 Ga, Ex iaD tD A20 IP67 T100 °C
• Non-sparking (China)	NEPSI Ex nA IIC T4 Gc
• Intrinsically Safe (Europe)	ATEX II 1G Ex ia IIC T4 Ga ATEX II 1D Ex ia IIIC T100 °C Da
• Non-sparking (Europe)	ATEX II 3G Ex nA IIC T4 Gc
• Flame Proof (International/Europe)	IECEx/ATEX II 1/2 GD, 1D, 2D, Ex d mb ia IIC T4 Ga/Gb, Ex ia ta IIC T100 °C Da
• Increased Safety (International/Europe)	IECEx/ATEX II 1/2 GD, 1D, 2D, Ex e mb ia IIC T4 Ga/Gb, Ex ia ta IIIC T100 °C Da
• Intrinsically Safe (International)	IECEx/ATEX II 1 G Ex ia IIC T4 Ga, IECEX/ATEX II 1D Ex ia ta IIC T100 °C Da
• Explosion Proof (Russia/Kazakhstan)	EAC Ex d
• Increased Safety (Russia/Kazakhstan)	EAC Ex e
• Intrinsically Safe (Russia/Kazakhstan)	EAC Ex ia
• Marine	• Lloyd's Register of Shipping • ABS Type Approval • Bureau Veritas
• Functional Safety	SIL-2 suitable in accordance with IEC 61508/61511

Programming	
Intrinsically Safe Siemens handheld programmer	Infrared receiver
• Approvals for handheld programmer	IS model: ATEX II 1 GD Ex ia IIC T4 Ga Ex ia D 20 T135 °C T_a = -20 ... +50 °C CSA/FM Class I, II, III, Div. 1, Groups A, B, C, D, E, F, G, T6 T_a = +50 °C IECEx SIR 09.0073
Handheld communicator	HART communicator 375/475
PC	• SIMATIC PDM • Emerson AMS • SITRANS DTM (for connection into FDT such as PACTware or Field-care)
Display (local)	Graphic local user interface including quick start wizard and echo profile displays

SITRANS LR250 Horn Antenna

Selection and Ordering data	Article No.
SITRANS LR250 horn antenna ↗	**7ML5431-**
2-wire, 25 GHz pulse radar level transmitter for continuous monitoring of liquids and slurries in storage and process vessels including high temperature and pressure, to a range of 20 m (66 ft) (antenna dependent). Ideal for small vessels and low dielectric media.	■■■■ **0** - ■■■■
↗ Click on the Article No. for the online configuration in the PIA Life Cycle Portal.	
Process Connection and Antenna Material	
316L (1.4435 or 1.4404) stainless steel, PTFE emitter, FKM seal[1)]	**0**
316L (1.4435 or 1.4404) stainless steel, PTFE emitter, FFKM seal[1)]	**1**
Hastelloy C-22/2.4602 (or equivalent), PTFE emitter, FKM seal[2)]	**2**
Hastelloy C-22/2.4602 (or equivalent), PTFE emitter, FFKM seal[2)]	**3**
Process Connection Type	
Threaded connection 316L	
1½" NPT (ASME B1.20.1) (tapered thread)[3)]	**A A**
R 1½" [(BSPT), EN 10226-1] (tapered thread)[3)]	**A B**
G 1½" [(BSPP), EN ISO 228-1] (parallel thread)[3)]	**A C**
2" NPT (ASME B1.20.1) (tapered thread)[4)]	**A D**
R 2" [(BSPT), EN 10226-1] (tapered thread)[4)]	**A E**
G 2" [(BSPP), EN ISO 228-1] (parallel thread)[4)]	**A F**
3" NPT (ASME B1.20.1) (tapered thread)[4)]	**A G**
R 3" [(BSPT), EN 10226-1] (tapered thread)[4)]	**A H**
G 3" [(BSPP), EN ISO 228-1] (parallel thread)[4)]	**A J**
Flanged connection 316L[4)]	
2" Class 150 ASME B16.5, raised face	**B D**
3" Class 150 ASME B16.5, raised face	**B E**
4" Class 150 ASME B16.5, raised face	**B F**
2" Class 300 ASME B16.5, raised face	**C D**
3" Class 300 ASME B16.5, raised face	**C E**
4" Class 300 ASME B16.5, raised face	**C F**
50A 10K JIS B 2220 flat face	**F A**
80A 10K JIS B 2220 flat face	**F B**
100A 10K JIS B 2220 flat face	**F C**
DN 50 PN 16 EN 1092-1 Type B1 raised face	**G A**
DN 80 PN 16 EN 1092-1 Type B1 raised face	**G B**
DN 100 PN 16 EN 1092-1 Type B1 raised face	**G C**
DN 150 PN 16 EN 1092-1 Type B1 raised face	**G D**
DN 50 PN 40 EN 1092-1 Type B1 raised face	**H A**
DN 80 PN 40 EN 1092-1 Type B1 raised face	**H B**
DN 100 PN 40 EN 1092-1 Type B1 raised face	**H C**
DN 150 PN 40 EN 1092-1 Type B1 raised face	**H D**

Selection and Ordering data	Article No.
SITRANS LR250 horn antenna	**7ML5431-**
2-wire, 25 GHz pulse radar level transmitter for continuous monitoring of liquids and slurries in storage and process vessels including high temperature and pressure, to a range of 20 m (66 ft) (antenna dependent). Ideal for small vessels and low dielectric media.	■■■■ **0** - ■■■■
Flanged connection Hastelloy C[4)]	
2" Class 150 ASME B16.5 raised face	**J A**
3" Class 150 ASME B16.5 raised face	**J B**
4" Class 150 ASME B16.5 raised face	**J C**
2" Class 300 ASME B16.5 raised face	**J D**
3" Class 300 ASME B16.5 raised face	**J E**
4" Class 300 ASME B16.5 raised face	**J F**
DN 50 PN 16 EN 1092-1 Type B1 raised face	**K A**
DN 80 PN 16 EN 1092-1 Type B1 raised face	**K B**
DN 100 PN 16 EN 1092-1 Type B1 raised face	**K C**
DN 50 PN 40 EN 1092-1 Type B1 raised face	**K D**
DN 80 PN 40 EN 1092-1 Type B1 raised face	**K E**
DN 100 PN 40 EN 1092-1 Type B1 raised face	**K F**
50A 10K JIS B 2220 raised face	**L A**
80A 10K JIS B 2220 raised face	**L B**
100A 10K JIS B 2220 raised face	**L C**
DN 50 PN 16 EN 1092-1 Type B1 raised face	**M A**
DN 80 PN 16 EN 1092-1 Type B1 raised face	**M B**
DN 100 PN 16 EN 1092-1 Type B1 raised face	**M C**
DN 150 PN 16 EN 1092-1 Type B1 raised face	**M D**
DN 50 PN 40 EN 1092-1 Type B1 raised face	**M E**
DN 80 PN 40 EN 1092-1 Type B1 raised face	**M F**
DN 100 PN 40 EN 1092-1 Type B1 raised face	**M G**
DN 150 PN 40 EN 1092-1 Type B1 raised face	**M H**
Communication/Output	
PROFIBUS PA[5)]	**1**
4 ... 20 mA, HART, start-up at < 3.6 mA	**2**
FOUNDATION Fieldbus[5)]	**3**
Enclosure/Cable inlet	
Aluminum, Epoxy painted	
2 x ½" NPT	**0**
2 x M20 x 1.5	**1**
Antenna	
1½" horn	**A**
2" horn (fits 2" ASME or DN 50 nozzles)	**B**
3" horn (fits 3" ASME or DN 80 nozzles)	**C**
4" horn (fits 4" ASME or DN 100 nozzles)	**D**
1½" horn with 100 mm extension	**E**
2" horn with 100 mm extension	**F**
3" horn with 100 mm extension	**G**
4" horn with 100 mm extension	**H**
Hastelloy C22 (or equivalent)	
2" horn (fits 2" ASME or DN 50 nozzles)	**J**
3" horn (fits 3" ASME or DN 80 nozzles)	**K**
4" horn (fits 4" ASME or DN 100 nozzles)	**L**
2" horn (fits 2" ASME or DN 50 nozzles) with 100 mm extension	**M**
3" horn (fits 3" ASME or DN 80 nozzles) with 100 mm extension	**N**
4" horn (fits 4" ASME or DN 100 nozzles) with 100 mm extension	**P**

Selection and Ordering data	Article No.
SITRANS LR250 horn antenna	**7ML5431-**
2-wire, 25 GHz pulse radar level transmitter for continuous monitoring of liquids and slurries in storage and process vessels including high temperature and pressure, to a range of 20 m (66 ft) (antenna dependent). Ideal for small vessels and low dielectric media.	■■■■ **0 -** ■■■■
Approvals	
General Purpose, CE, CSA, FM, FCC, RED, RCM	**A**
Intrinsically Safe: CSA/FM Class I, Div. 1, Groups A, B, C, D, Class II, Div. 1, Groups E, F, G, Class III T4 FCC, Industry Canada	**B**
Intrinsically Safe: IECEx/ATEX II 1 G Ex ia IIC T4 Ga, IECEx/ATEX II 1D Ex ia ta IIIC T100 °C Da, INMETRO Ex ia IIC T4 Ga, Ex ia ta IIIC T100 °C Da, CE, RED, RCM	**C**
Non-incendive: CSA/FM Class I, Div. 2, Groups A, B, C, D T5, FCC, Industry Canada	**D**
Non Sparking: ATEX II 3G Ex nA IIC T4 Gc, CE, RED, RCM	**E**
Increased Safety: IECEx/ATEX II 1/2 GD,1D, 2D Ex e mb ia IIC T4 Ga/Gb, Ex ia ta IIIC T100 °C Da, INMETRO Ex e ia mb IIC T4 Ga/Gb, Ex ia ta IIIC T100 °C Da, CE, RED, RCM[6)]	**F**
Flameproof: IECEx/ATEX II 1/2 GD 1D, 2D Ex d mb ia IIC T4 Ga/Gb, Ex ia ta IIIC T100 °C Da INMETRO Ex d ia mb IIC T4 Ga/Gb, Ex ia ta IIIC T100 °C Da, CE, RED, RCM[6)]	**G**
Explosion proof: CSA/FM Class I, II, and III, Div. 1, Groups A, B, C, D, E, F, G, FCC, Industry Canada[6)]	**H**
Non Sparking: NEPSI Ex nA IIC T4 Gc	**K**
Intrinsically Safe: NEPSI Ex ia IIC T4 Ga, Ex iaD tD A20 IP67 T100 °C	**L**
Flameproof: NEPSI Ex d ia mb IIC T4 Ga/Gb, Ex iaD tD A20 IP67 T100 °C[6)]	**M**
Increased Safety: NEPSI Ex e ia mb IIC T4 Ga/Gb, Ex iaD tD A20 IP67 T100 °C[6)]	**N**
Pressure rating	
Rating per Pressure/Temperature curves in manual	**0**
0.5 bar g (7.25 psi g) maximum[7)]	**1**

1) Available with process connection options AA ... HD and Antenna Versions A ... H only

2) Available with process connection options JA ... MH and Antenna Versions J ... P only

3) Not available with Antenna options B, C, D, F, G, H.

4) Not available with Antenna options A and E.

5) Available with Approval options A, B, C, D, K, and L

6) Available only with Communications option 2.

7) Available with Process Connection and Antenna Material 0, 1, 2, and 3 only

SITRANS LR250 Horn Antenna

Selection and Ordering data	Order code
Further designs	
Please add "**-Z**" to Article No. and specify Order code(s).	
Plug M12 with mating Connector[1)2)3)]	**A50**
Plug 7/8" with mating Connector[2)3)4)]	**A55**
Stainless steel tag [69 x 50 mm (2.71 x 1.97 inch)]: Measuring-point number/identification (max. 27 characters); specify in plain text	**Y15**
Manufacturer's Test Certificate: M to DIN 55350, Part 18 and to ISO 9000	**C11**
Material inspection certificate 3.1 of EN 10204	**C12**
Functional Safety (SIL 2). Device suitable for use in accordance with IEC 61508 and IEC 61511[3)5)]	**C20**
Namur NE43 compliant, device preset to failsafe < 3.6 mA[5)]	**N07**
Compact Operating Instructions for HART/ mA device	Article No.
English, French, German, Spanish, Italian, Dutch, Danish, Finnish, Greek, Portuguese (Portugal), Swedish	**A5E33469191**
English, Bulgarian, Czech, Estonian, Hungarian, Latvian, Lithuanian, Polish, Romanian, Slovakian, Slovenian	**A5E33469171**
English, Portuguese (Brazil), Chinese	**A5E34046583**
Note: The Operating Instructions should be ordered as a separate line item on the order.	
All literature is available to download for free, in a range of languages, at http://www.siemens.com/processinstrumentation/documentation	
Compact Operating Instructions for PROFIBUS PA device	
English, French, German, Spanish, Italian, Dutch, Danish, Finnish, Greek, Portuguese (Portugal), Swedish	**A5E33469239**
English, Bulgarian, Czech, Estonian, Hungarian, Latvian, Lithuanian, Polish, Romanian, Slovakian, Slovenian	**A5E33472685**
English, Portuguese (Brazil), Chinese	**A5E34046624**
Note: The Operating Instructions should be ordered as a separate line item on the order.	
All literature is available to download for free, in a range of languages, at http://www.siemens.com/processinstrumentation/documentation	

Selection and Ordering data	Article No.
Compact Operating Instructions for FOUNDATION Fieldbus device	
English, French, German, Spanish, Italian, Dutch, Danish, Finnish, Greek, Portuguese (Portugal), Swedish	**A5E33472700**
English, Bulgarian, Czech, Estonian, Hungarian, Latvian, Lithuanian, Polish, Romanian, Slovakian, Slovenian	**A5E33472738**
English, Portuguese (Brazil), Chinese	**A5E34046626**
Note: The Operating Instructions should be ordered as a separate line item on the order.	
All literature is available to download for free, in a range of languages, at http://www.siemens.com/processinstrumentation/documentation	
Other Operating Instructions	
SITRANS LR250 Functional Safety manual, English	**A5E32286471**
Note: The Operating Instructions should be ordered as a separate line item on the order.	
All literature is available to download for free, in a range of languages, at http://www.siemens.com/processinstrumentation/documentation	
Accessories	
Handheld programmer, Intrinsically safe, EEx ia	**7ML1930-1BK**
HART modem/USB (for use with a PC and SIMATIC PDM)	**7MF4997-1DB**
One metallic cable gland M20 x 1.5, rated -40 ... +80 °C (-40 ... +176 °F), HART (two are required)	**7ML1930-1AP**
One metallic cable gland M20 x 1.5, rated -40 ... +80 °C (-40 ... +176 °F), PROFIBUS PA and FOUNDATION Fieldbus (two are required)[6)]	**7ML1930-1AQ**
FDA approved FKM O-ring for 2" G (BSPP) process connections -28 ... +80 °C (-28 ... +176 °F)	**7ML1830-3AN**
SITRANS RD100, loop powered display - see Chapter 7	**7ML5741-...**
SITRANS RD200, universal input display with Modbus conversion - see Chapter 7	**7ML5740-...**
SITRANS RD300, dual line display with totalizer and linearization curve and Modbus conversion - see Chapter 7	**7ML5744-...**
SITRANS RD500 web, universal remote monitoring solution for instrumentation - see Chapter 7	**7ML5750-...**
For applicable back up point level switch - see point level measurement section	

1) Available with enclosure option 1 only
2) To be used with communication options 1 and 3 only. Connector has IP67 rating.
3) Available with approval options A and B. Available with approval option C for use on intrinsically safe applications only. Not rated for dust Ex.
4) Available with enclosure option 0 only
5) Applicable to communication option 2 only
6) For use with communication options 1 and 3 only

Characteristic curves

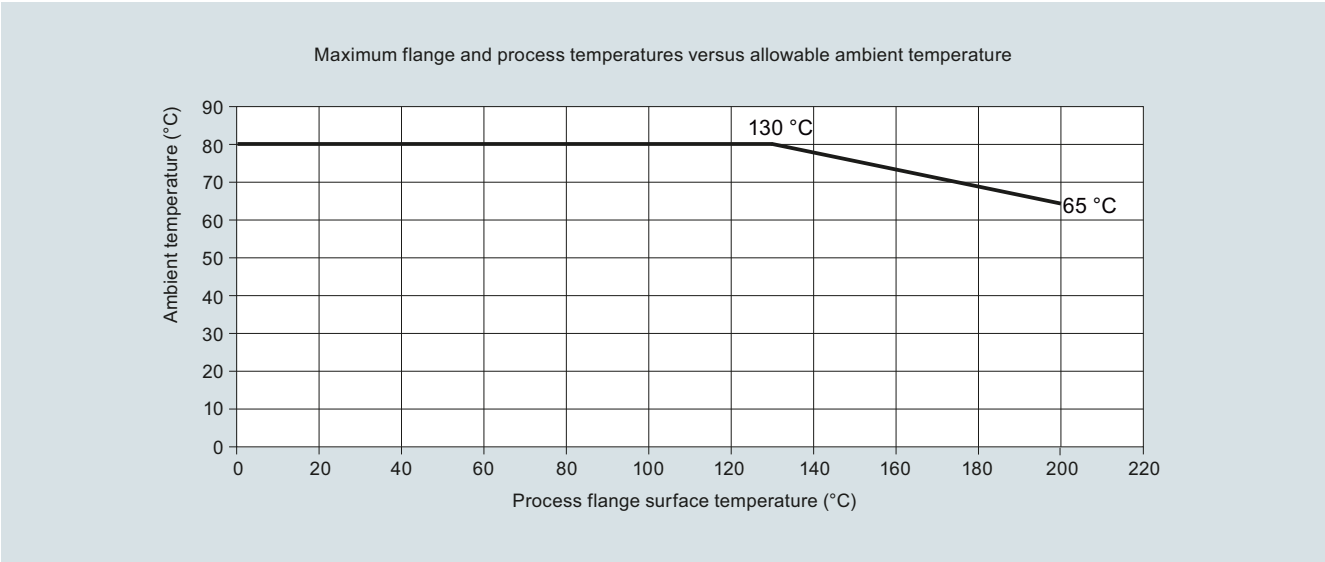

SITRANS LR250 ambient/process flange surface temperature curve

Dimensional drawings

Threaded Horn Antenna

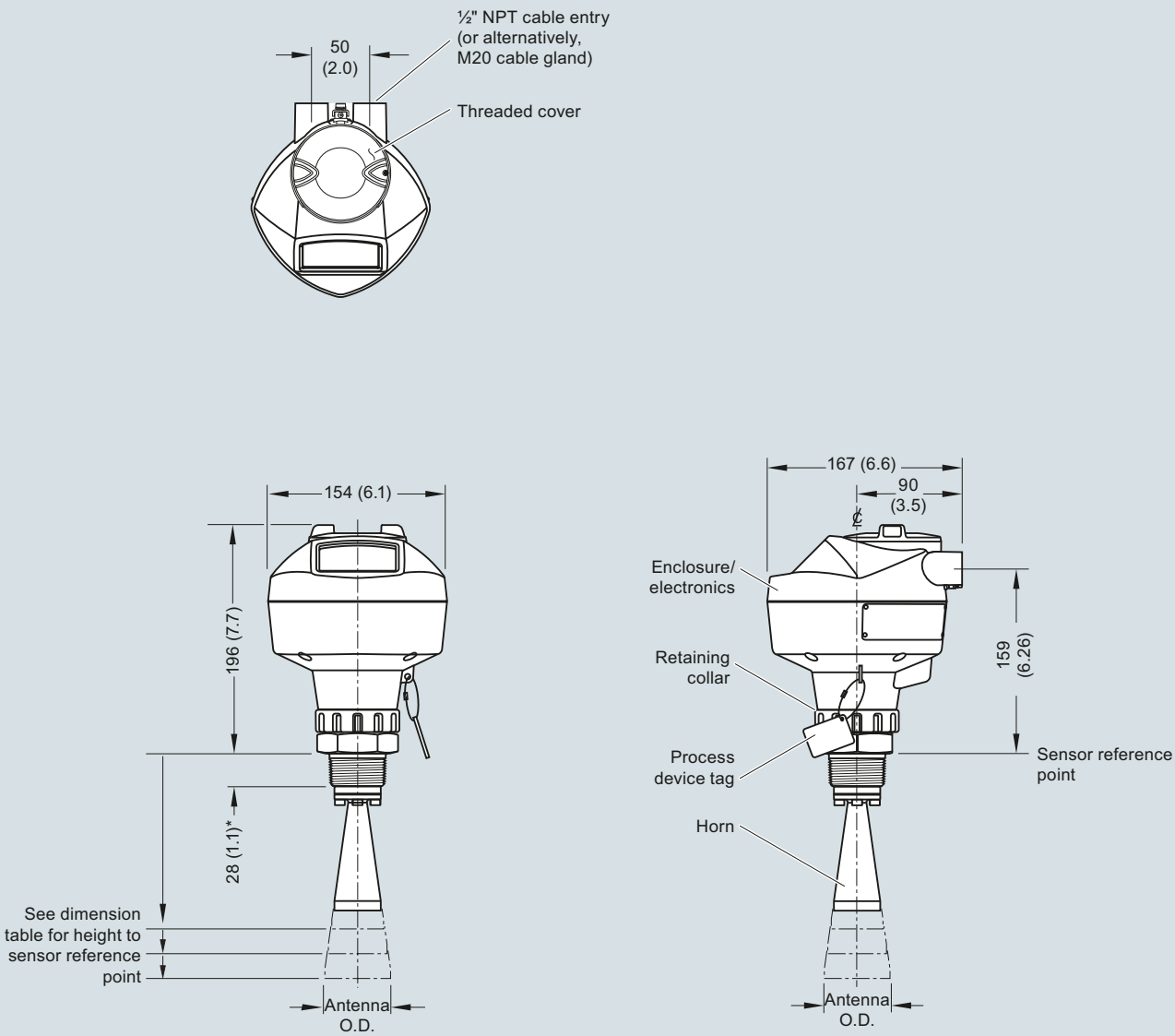

*28 mm (1.1) for 1.5 inch and 2 inch, 42 mm (1.65) for 3 inch

Antenna Type	Antenna O.D.	Height to sensor reference point			Beam angle	Measurement range
		1-1/2" threaded connection	2" threaded connection	3" threaded connection		
1.5" horn	39.8 (1.57)	135 (5.3)	N/A	N/A	19 degrees	10 m (32.8 ft)
2" horn	47.8 (1.88)	N/A	166 (6.55)	180 (7.09)	15 degrees	20 m (65.6 ft)
3" horn	74.8 (2.94)	N/A	199 (7.85)	213 (8.39)	10 degrees	20 m (65.6 ft)
4" horn	94.8 (3.73)	N/A	254 (10)	268 (10.55)	8 degrees	20 m (65.6 ft)

SITRANS LR250 Threaded Horn Antenna, dimensions in mm (inch)

Threaded Horn Antenna with Extension

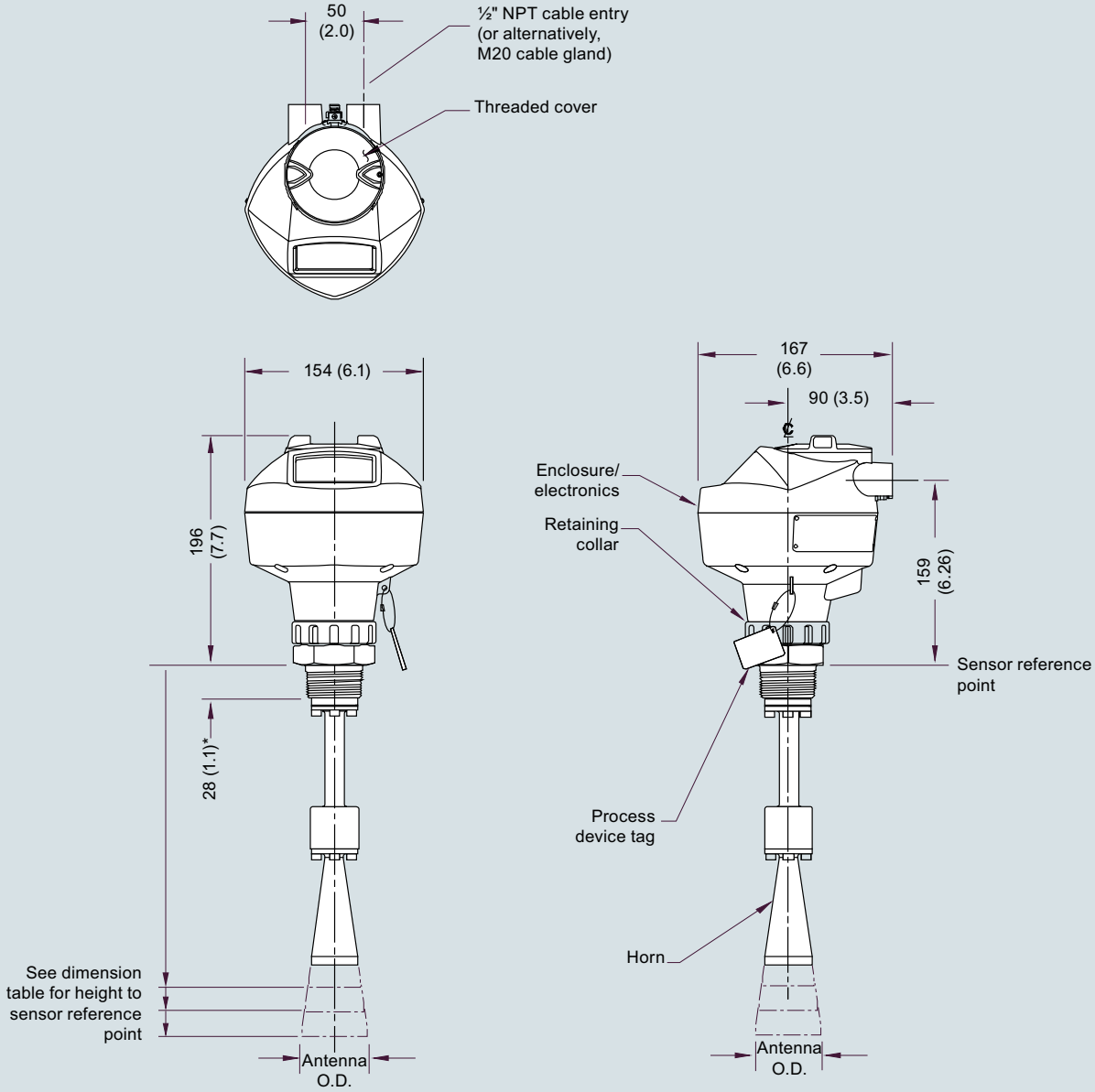

*28 mm (1.1) for 1.5 inch and 2 inch, 42 mm (1.65) for 3 inch

Antenna Type	Antenna O.D.	Height to sensor reference point			Beam angle	Measurement range
		1-1/2" threaded connection	2" threaded connection	3" threaded connection		
1.5" horn	39.8 (1.57)	235 (9.3)	N/A	N/A	19 degrees	10 m (32.8 ft)
2" horn	47.8 (1.88)	N/A	266 (10.47)	280 (11.02)	15 degrees	20 m (65.6 ft)
3" horn	74.8 (2.94)	N/A	299 (11.77)	313 (12.32)	10 degrees	20 m (65.6 ft)
4" horn	94.8 (3.73)	N/A	354 (13.94)	368 (14.49)	8 degrees	20 m (65.6 ft)

SITRANS LR250 Threaded Horn Antenna with extension, dimensions in mm (inch)

SITRANS LR250 Horn Antenna

Flanged Horn

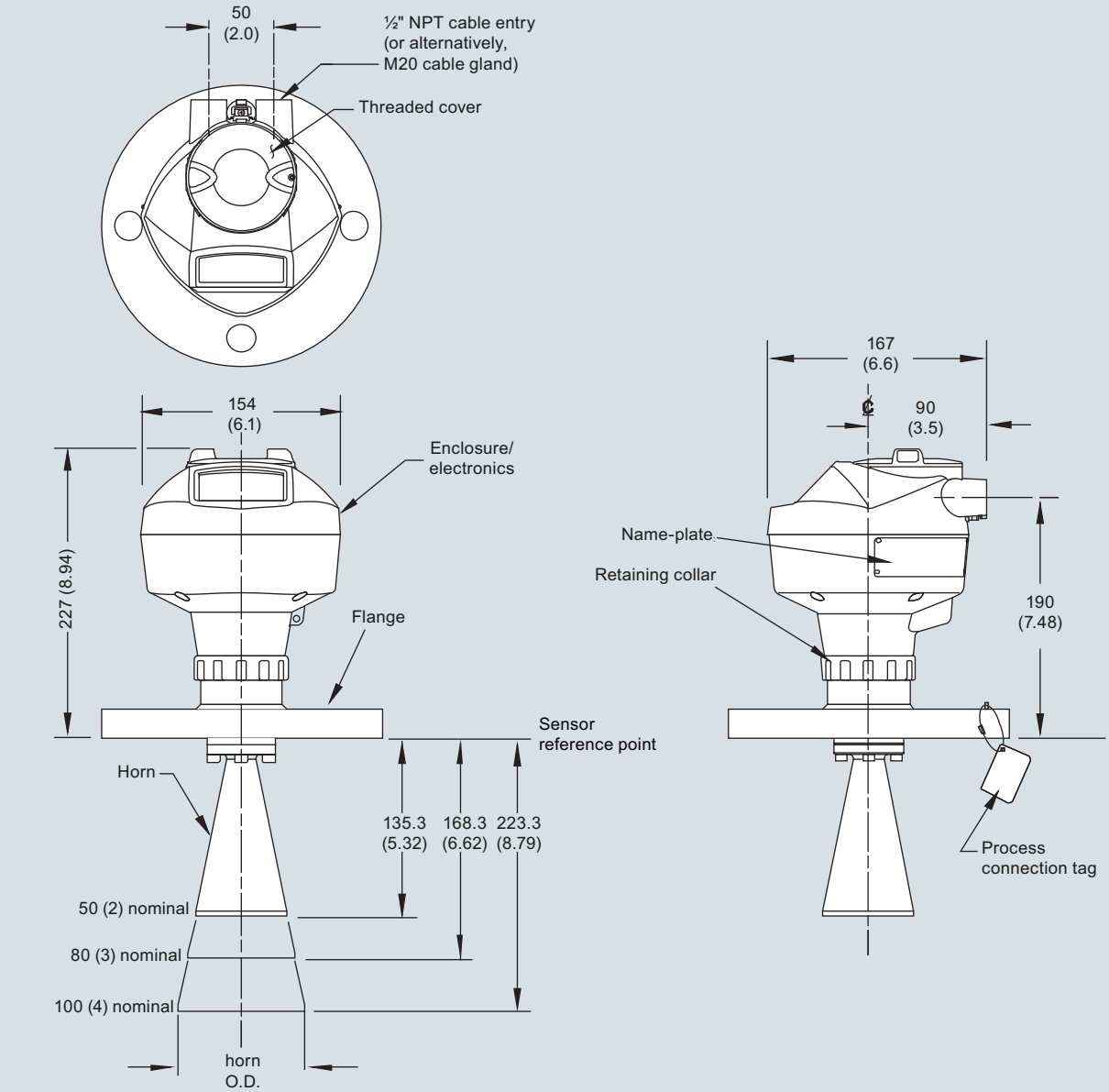

Nominal Horn Size	Horn O.D.	Height to sensor reference point		Beam angle	Measurement range
		Stainless steel flange raised or flat-faced	Optional alloy flange		
50 (2)	47.8 (1.88)	135.3 (5.32)	138.3 (5.44)	15 degrees	20 m (65.6 ft)
80 (3)	74.8 (2.94)	168.3 (6.62)	171.3 (6.74)	10 degrees	20 m (65.6 ft)
100 (4)	94.8 (3.73)	223.3 (8.79)	226.3 (8.90)	8 degrees	20 m (65.6 ft)

SITRANS LR250 Flanged Horn Antenna, dimensions in mm (inch)

Flanged Horn with Extension

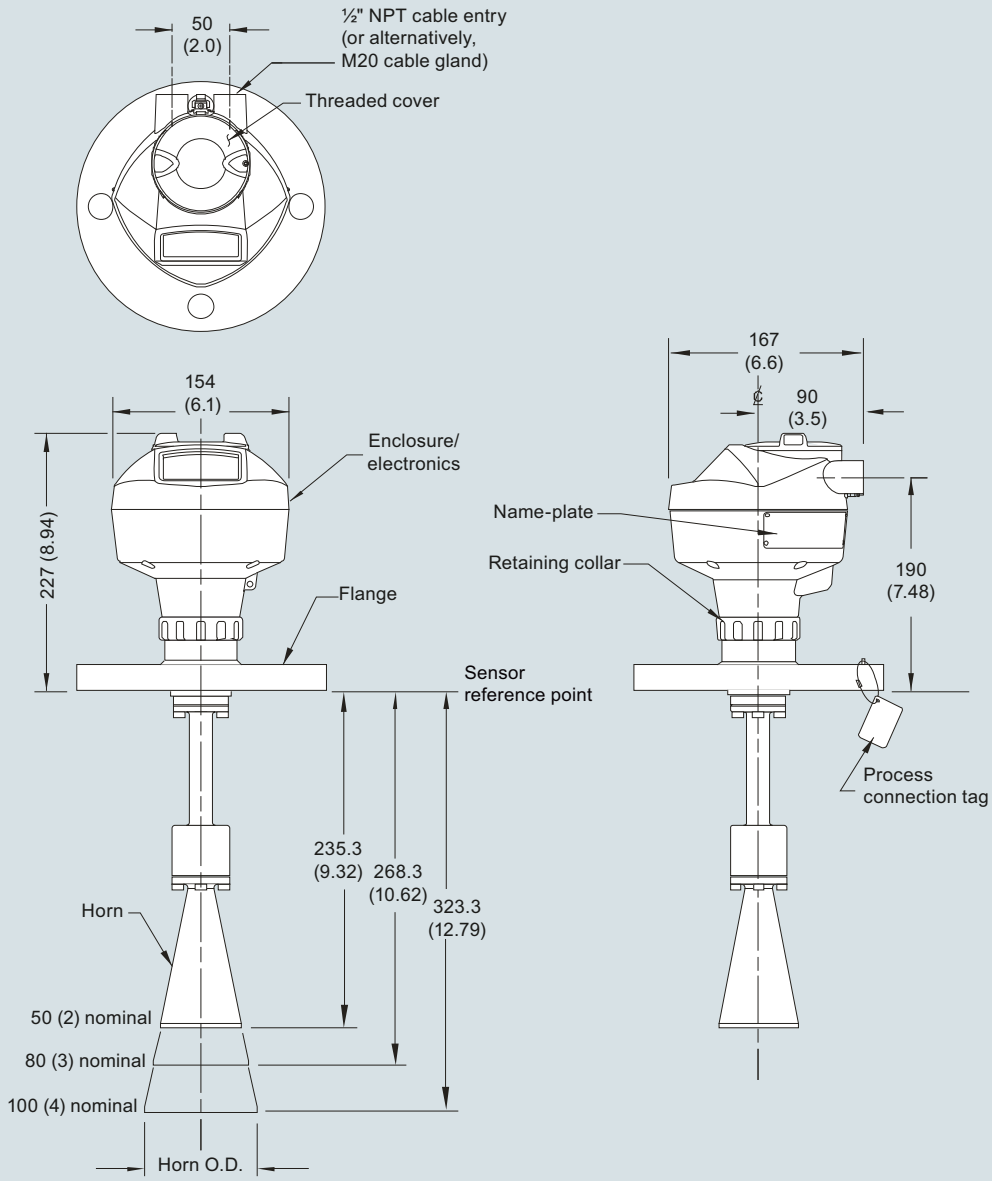

Nominal Horn Size	Horn O.D.	Height to sensor reference point		Beam angle	Measurement range
		Stainless steel flange raised or flat-faced	Optional alloy flange		
50 (2)	47.8 (1.88)	235.3 (9.26)	238.3 (9.38)	15 degrees	20 m (65.6 ft)
80 (3)	74.8 (2.94)	268.3 (10.56)	271.3 (10.68)	10 degrees	20 m (65.6 ft)
100 (4)	94.8 (3.73)	323.3 (12.73)	326.3 (12.85)	8 degrees	20 m (65.6 ft)

SITRANS LR250 Flanged Horn Antenna with extension, dimensions in mm (inch)

Circuit diagrams

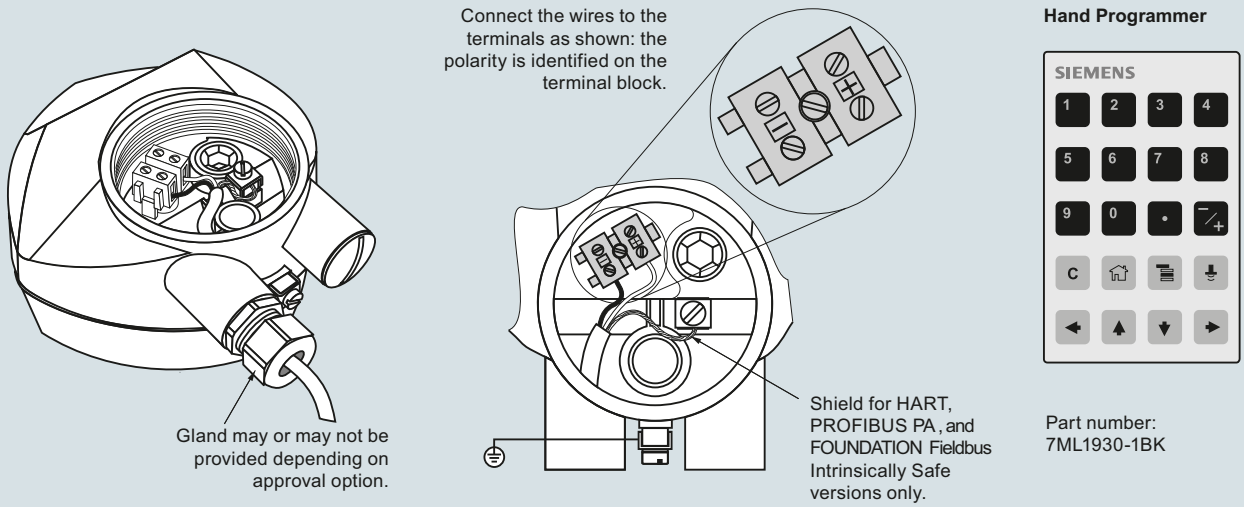

Notes:

1. DC terminal shall be supplied from a source providing electrical isolation between the input and output, to meet the applicable safety requirements of IEC 61010-1.
2. All field wiring must have insulation suitable for rated input voltages.
3. Use shielded twisted pair cable (14 ... 22 AWG) for HART version.
4. Separate cables and conduit may be required to conform to standard instrumentation wiring practices or electrical codes.

SITRANS LR250 connections

Selection and ordering data

SITRANS LR250 Specials	Article No.
NOTE: **LR260 head can be supplied with any LR250 process connection or antenna as special order. For LR250, this means a stronger signal and longer measurement range is possible.**	
SITRANS LR250 horn version enclosures (PROFIBUS PA models)	
SITRANS LR250 horn version enclosure with board stack, NPT cable inlet, approval option A, with PROFIBUS PA communication, no process connection	**A5E01156836**
SITRANS LR250 horn version enclosure with board stack, M20 cable inlet, approval option A, with PROFIBUS PA communication, no process connection	**A5E01156838**
SITRANS LR250 horn version enclosure with board stack, M20 cable inlet, approval option B, with PROFIBUS PA communication, no process connection	**A5E01156841**
SITRANS LR250 horn version enclosure with board stack, NPT cable inlet, approval option C, with PROFIBUS PA communication, no process connection	**A5E01156843**
SITRANS LR250 horn version enclosure with board stack, M20 cable inlet, approval option C, with PROFIBUS PA communication, no process connection	**A5E01156844**
SITRANS LR250 horn version enclosure with board stack, NPT cable inlet, approval option D, with PROFIBUS communication, no process connection	**A5E01156846**
SITRANS LR250 horn version enclosure with board stack, M20 cable inlet, approval option D, with PROFIBUS PA communication, no process connection	**A5E01156848**
SITRANS LR250 horn version enclosures (FOUNDATION Fieldbus models)	
SITRANS LR250 enclosure with board stack, NPT cable inlet, approval option B, with FOUNDATION Fieldbus communication, no process connection	**A5E03769538**
SITRANS LR250 enclosure with board stack, NPT cable inlet, approval option D, with FOUNDATION Fieldbus communication, no process connection	**A5E03769539**
SITRANS LR250 enclosure with board stack, M20 cable inlet, approval option E, with FOUNDATION Fieldbus communication, no process connection	**A5E03769543**
SITRANS LR250 horn version enclosure with board stack, M20 cable inlet, approval option C, with FOUNDATION Fieldbus communication, no process connection	**A5E02654608**
SITRANS LR250 horn version enclosure with board stack, NPT cable inlet, approval option A, with FOUNDATION Fieldbus communication, no process connection	**A5E02653792**
SITRANS LR250 horn version enclosure with board stack, M20 cable inlet, approval option A, with FOUNDATION Fieldbus communication, no process connection	**A5E02653793**

SITRANS LR250 Specials	Article No.
SITRANS LR250 horn version enclosure with board stack, NPT cable inlet, approval option C, with FOUNDATION Fieldbus communication, no process connection	**A5E02654606**
SITRANS LR250 horn version enclosures (< 3.6 mA start-up HART)	
SITRANS LR250 horn version enclosure with board stack, M20 cable inlet, approval option A, with HART communication start-up at < 3.6 mA, no process connection	**A5E02956317**
SITRANS LR250 horn version enclosure with board stack, M20 cable inlet, approval option C, with HART communication start-up at < 3.6 mA, no process connection	**A5E02956319**
SITRANS LR250 horn version enclosure with board stack, M20 cable inlet, approval option E, with HART communication start-up at < 3.6 mA, no process connection	**A5E02956320**
SITRANS LR250 horn version enclosure with board stack, M20 cable inlet, approval option F, with HART communication start-up at < 3.6 mA, no process connection	**A5E02956322**
SITRANS LR250 horn version enclosure with board stack, M20 cable inlet, approval option G, with HART communication start-up at < 3.6 mA, no process connection	**A5E02956323**
SITRANS LR250 horn version enclosure with board stack, NPT cable inlet, approval option A, with HART communication start-up at < 3.6 mA, no process connection	**A5E03441096**
SITRANS LR250 horn version enclosure with board stack, NPT cable inlet, approval option B, with HART communication start-up at < 3.6 mA, no process connection	**A5E03441097**
SITRANS LR250 horn version enclosure with board stack, NPT cable inlet, approval option H, with HART communication start-up at < 3.6 mA, no process connection	**A5E03441099**

SITRANS LR250 Specials

SITRANS LR250 Specials	
	Article No.
Sun shield for SITRANS LR250 enclosure, stainless steel	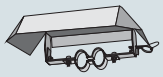
	A5E39142556
SITRANS LR250 horn antenna and extension kits	
38 mm (1.5 inch) horn antenna kit, 1.5" process connections only	**A5E01151539**
100 mm (4 inch) horn antenna extension kit, 1.5" process connections only	**A5E01151553**
50 mm (2 inch) stainless steel 316L horn antenna kit	**A5E01151569**
75 mm (3 inch) stainless steel 316L horn antenna kit	**A5E01151571**
100 mm (4 inch) stainless steel 316L horn antenna kit	**A5E01151573**
100 mm (4 inch) horn antenna extension kit, 50 mm (2 inch), 75 mm (3 inch), and 100 mm (4 inch) process connection	**A5E01151577**
50 mm (2 inch) horn antenna kit, Hastelloy C-22	**A5E01151584**
75 mm (3 inch) horn antenna kit, Hastelloy C-22	**A5E01151585**
100 mm (4 inch) horn antenna kit, Hastelloy C-22	**A5E01151587**
5 Dupont 1Gr Polypack, PTFE grease kit	**A5E01151626**
SITRANS LR250 lid with O-ring	**A5E02465410**
Ex-proof plugs	
Ex-proof plugs kit, 1/2" NPT, qty 5	**A5E39979991**
Ex-proof plugs kit, M20, qty 5	**A5E39979992**