P705DR T-Koppling Förminskad CuxCuxCu

(Tee with two ends reduced)

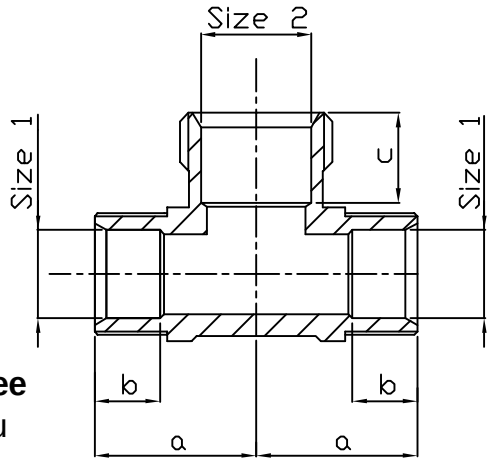

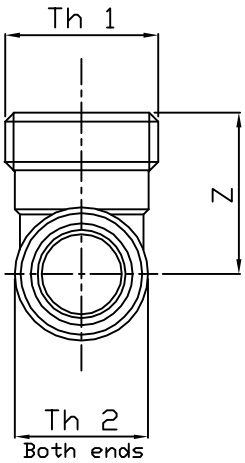

Reducing Tee
Cu x Cu x Cu

Product Code	Size 1	Size 2	a	b	c	Z	Th 1	Th 2
P705DR.120	10	12	20.7	9	9	20.7	3/8"B.S.P	3/8"B.S.P
P705DR.123	12	15	20.7	9	12.7	20.7	1/2"B.S.P	3/8"B.S.P
P705DR.13	15	22	26	12.7	12.7	26.5	1 1/8" x 14 T.P.I Whit	1/2"B.S.P
P705DR.1325	16	15	23	12.7	12.7	22.5	1/2"B.S.P	1/2"B.S.P
P705DR.133	18	22	26.5	12.7	13.5	26.5	1 1/8" x 14 T.P.I Whit	ø23.8 x 14 T.P.I Whit
P705DR.165	22	28	32.5	12.7	13.5	32.5	ø35.0 x 14 T.P.I Whit	1 1/8" x 14 T.P.I Whit

FLOWFLEX

TO BE USED FOR REFERENCE ONLY

First Angle Projection

PRODUCT MARKING =

Flowflex reserve the right to alter the product ranges and specifications contained in this drawing without prior notice

Drawing Reference No P705DR Matrix