P704DR T-Koppling Förminskad CuxCuxCu

(Tee with end & branch reduced)

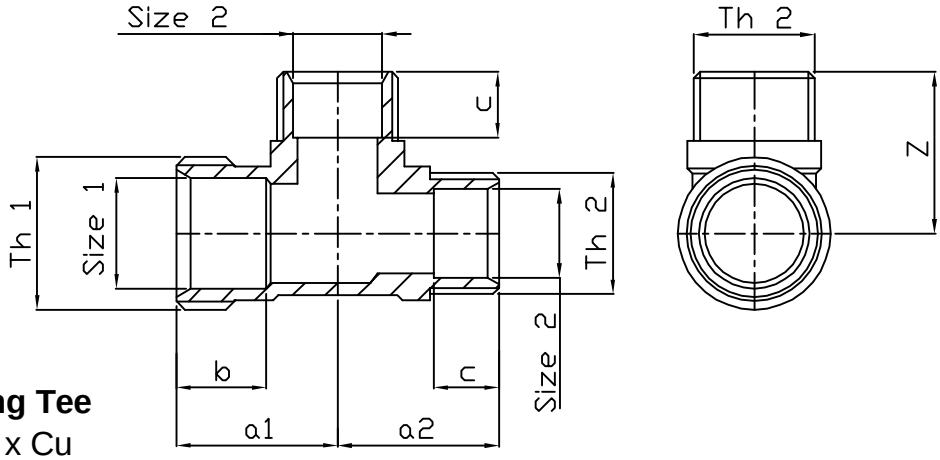

Reducing Tee
Cu x Cu x Cu

Product Code	Size 1	Size 2	a1 / a2	b	c	Z	Th 1	Th 2
P704DR.120	12	10	21 / 21	9	9	21	3/8"B.S.P	3/8"B.S.P
P704DR.1201	15	10	22 / 22	12.7	9	22	1/2"B.S.P	3/8"B.S.P
P704DR.121	15	12	22 / 22	12.7	9	22	1/2"B.S.P	3/8"B.S.P
P704DR.075	18	12	23 / 23	12.7	9	23	ø23.8 x 14 T.P.I Whit	3/8"B.S.P
P704DR.076	18	15	23 / 23	12.7	12.7	23	ø23.8 x 14 T.P.I Whit	1/2"B.S.P
P704DR.14	22	15	23.6 / 23.6	14.0	12.7	27.4	1 1/8" x 14 T.P.I Whit	1/2"B.S.P
P704DR.171	28	22	30 / 30	15.6	13.5	30	ø35.0 x 14 T.P.I Whit	1 1/8" x 14 T.P.I Whit

FLOWFLEX

TO BE USED FOR REFERENCE ONLY

First Angle Projection

PRODUCT MARKING =

Flowflex reserve the right to alter the product ranges and specifications contained in this drawing without prior notice

Drawing Reference No P704DR Matrix