P737DR T-Koppling CuxCuxinv gg

(Tee with Female End)

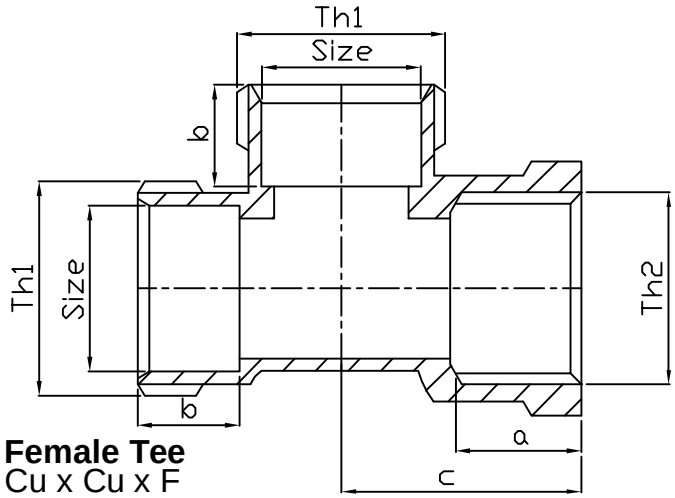

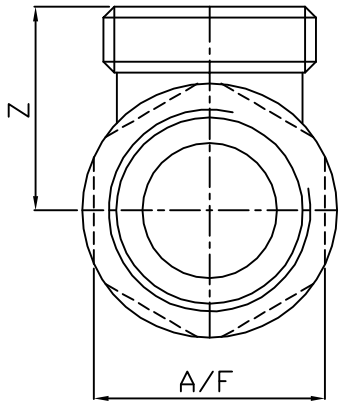

Female Tee
Cu x Cu x F

Product Code	Size	a	b	c	Z	A/F	Th 1	Th 2
P737DR.1	15	15	12.7	26.8	26.3	ø26 (Flange Only)	1/2"B.S.P	1/2"B.S.P
P737DR.2	22	15	14	26.8	26.3	ø28 (Flange Only)	1 1/8" x 14 T.P.I Whit	1/2"B.S.P
P737DR.3	22	18	14	33	28.5	31.75	1 1/8" x 14 T.P.I Whit	3/4"B.S.P

FLOWFLEX

TO BE USED FOR REFERENCE ONLY

PRODUCT MARKING =

Flowflex reserve the right to alter the product ranges and specifications contained in this drawing without prior notice

Drawing Reference No P737DR Matrix