Panel Radiators and Convectors

Product information and installation instructions

CONTENTS

Panel radiators and convectors

Panel Radiators Type D 3
- Product range 4
- Technical data 8
- Supply and return 9
- Installation instructions 10

Panel Radiators Type K 11
- Product range 12
- Technical data 16
- Installation instructions 17

Panel Radiators Type D and Type K 19
- Maintenance instructions 19
- Accessories 20
- Radiator thermostats 23
- Radiator valves 24
- Other accessories 25

Convectors 29
- Product range 30
- Installation instructions 31
- Accessories 32
- Maintenance instructions 32

Warranty conditions 33

Panel radiators in standard design

Type K11

Type K21–22

Type K33

Panel radiators with integrated connection set

Type D11

Type D21-22

Type D33

Convectors

Type 22

Type 33

Altech

PANEL RADIATORS TYPE D

Altech panel radiator (Type D) with integrated connection set, for quick and easy installation. Available as type D11, 21, 22 and 33 and in different lengths and heights. The radiator is equipped with Danfoss radiator valve RA-U BIV low-normal flow with RA-click connection. The radiator valve is suitable for all Danfoss thermostats (find more information under Accesories). It is supplied with four M22x1.5 c/c 40 mm connections, enabling connection of the radiator from the side or bottom. Types D21 and 22 are reversible and surrounding brackets are included. Types D11 and 33 must be ordered with right or left connections. Type D11 includes partially surrounding brackets and D33 includes surrounding brackets. The radiator is equipped with side panels and a robust top grille. Plug, drain and vent screws are also included. Manufactured in accordance with EN 442-1. Colour code: RAL 9016.

Dimensions

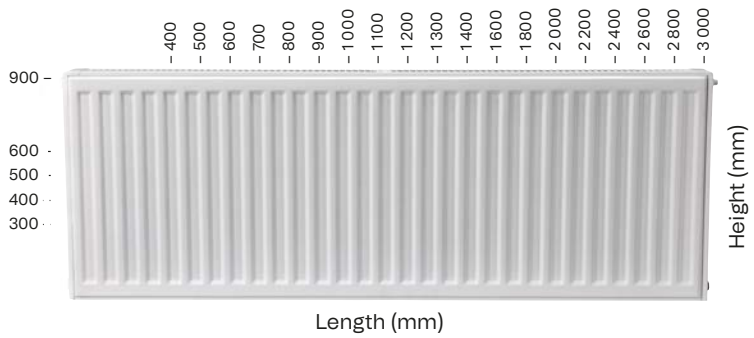

Surrounding brackets (included).

Radiator types

Type D11

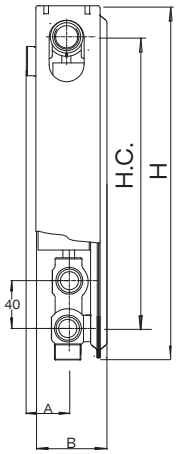

Type D21

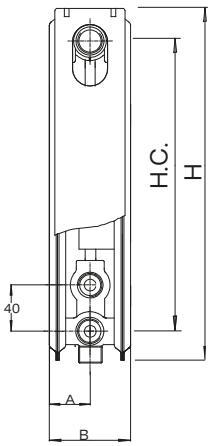

Type D22

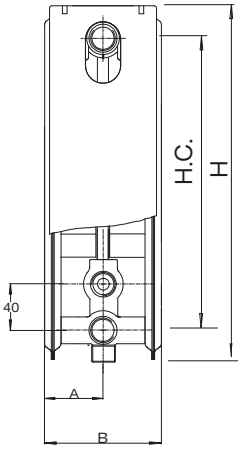

Type D33

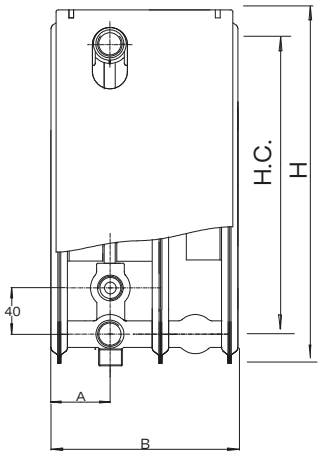

H	H.C	Type D11		Type D21		Type D22		Type D33	
Height (mm)	(mm)	B	A	B	A	B	A	B	A
300	250 -2	61	37	77	38,5	100	50	158	50
400	350 -2	61	37	77	38,5	100	50	158	50
500	450 -2	61	37	77	38,5	100	50	158	50
600	550 -2	61	37	77	38,5	100	50	158	50
900	850 -2	61	37	77	38,5	100	50	158	50

Product range

Altech Panel radiators with integrated connection set, Type D11

Partially surrounding brackets included.

The heat output values given are at a room temperature of 20 °C.

Altech Type D11												
Height → (mm)	300				400				500			
Length ↓ (mm)	Right	Left	Watts 55/45	Watts 60/45	Right	Left	Watts 55/45	Watts 60/45	Right	Left	Watts 55/45	Watts 60/45
400	6672134	6672135	121	134	6672158	6672159	160	177	6672182	6672183	196	217
700	6672136	6672137	212	236	6672160	6672161	280	311	6672184	6672185	344	381
900	6672138	6672139	273	303	6672162	6672163	360	399	6672186	6672187	442	490
1000	6672140	6672141	304	337	6672164	6672165	400	444	6672188	6672189	491	544
1200	6672142	6672143	365	404	6672166	6672167	481	533	6672190	6672191	589	653
1300	6672144	6672145	395	438	6672168	6672169	521	577	6672192	6672193	638	708
1600	6672146	6672147	486	539	6672170	6672171	641	710	6672194	6672195	786	871
1800	6672148	6672149	547	607	6672172	6672173	721	799	6672196	6672197	884	980
2000	6672150	6672151	608	674	6672174	6672175	801	888	6672198	6672199	982	1089
2300	6672152	6672153	699	775	6672176	6672177	922	1022	6672200	6672201	1130	1252
2600	6672154	6672155	791	876	6672178	6672179	1042	1155	6672202	6672203	1277	1416
3000	6672156	6672157	912	1011	6672180	6672181	1202	1333	6672204	6672205	1474	1634

Altech Type D11				
Height → (mm)	600			
Length ↓ (mm)	Right	Left	Watts 55/45	Watts 60/45
400	6672206	6672207	230	255
700	6672208	6672209	403	447
900	6672210	6672211	518	574
1000	6672212	6672213	576	638
1200	6672214	6672215	691	766
1300	6672216	6672217	749	830
1600	6672218	6672219	922	1022
1800	6672220	6672221	1037	1149
2000	6672222	6672223	1153	1277
2300	6672224	6672225	1325	1469
2600	-	-	-	-
3000	-	-	-	-

Altech Panel radiators with integrated connection set, Type D21

Surrounding brackets included.

The heat output values given are at a room temperature of 20 °C.

Altech Type D21															
Height → (mm)	300			400			500			600			900		
Length ↓ (mm)	Item No.	Watts 55/45	Watts 60/45	Item No.	Watts 55/45	Watts 60/45	Item No.	Watts 55/45	Watts 60/45	Item No.	Watts 55/45	Watts 60/45	Item No.	Watts 55/45	Watts 60/45
400	6672226	150	167	6672238	192	213	6672250	231	256	6672262	268	297	6672274	367	408
700	6672227	263	292	6672239	336	373	6672251	405	449	6672263	469	521	6672275	643	715
900	6672228	339	375	6672240	432	480	6672252	520	578	6672264	603	670	6672276	827	920
1000	6672229	376	417	6672241	480	533	6672253	578	642	6672265	670	744	6672277	919	1022
1200	6672230	452	501	6672242	577	640	6672254	694	770	6672266	804	893	6672278	1103	1226
1300	6672231	489	542	6672243	625	693	6672255	752	834	6672267	871	967	6672279	1195	1329
1600	6672232	602	668	6672244	769	853	6672256	925	1027	6672268	1072	1191	6672280	1471	1635
1800	6672233	678	751	6672245	865	960	6672257	1041	1156	6672269	1206	1340	-	-	-
2000	6672234	753	835	6672246	961	1067	6672258	1157	1284	6672270	1340	1489	-	-	-
2300	6672235	866	960	6672247	1106	1227	6672259	1330	1477	6672271	1541	1712	-	-	-
2600	6672236	979	1085	6672248	1250	1387	6672260	1504	1669	6672272	1743	1935	-	-	-
3000	6672237	1130	1252	6672249	1442	1600	6672261	1735	1926	6672273	2011	2233	-	-	-

Altech Panel radiators with integrated connection set, Type D22

Surrounding brackets included.

The heat output values given are at a room temperature of 20 °C.

Altech Type D22															
Height → (mm)	300			400			500			600			900		
Length ↓ (mm)	Item No.	Watts 55/45	Watts 60/45	Item No.	Watts 55/45	Watts 60/45	Item No.	Watts 55/45	Watts 60/45	Item No.	Watts 55/45	Watts 60/45	Item No.	Watts 55/45	Watts 60/45
400	6672281	180	199	6672293	238	264	6672305	291	323	6672317	339	377	6672329	453	504
700	6672282	315	349	6672294	416	462	6672306	509	566	6672318	594	660	6672330	793	883
900	6672283	405	449	6672295	535	594	6672307	655	727	6672319	764	848	6672331	1020	1135
1000	6672284	450	499	6672296	595	660	6672308	728	808	6672320	849	943	6672332	1133	1261
1200	6672285	540	599	6672297	714	792	6672309	873	970	6672321	1018	1131	6672333	1360	1513
1300	6672286	585	649	6672298	773	858	6672310	946	1051	6672322	1103	1226	6672334	1473	1639
1600	6672287	720	798	6672299	952	1057	6672311	1165	1293	6672323	1358	1509	6672335	1814	2018
1800	6672288	810	898	6672300	1071	1189	6672312	1310	1455	6672324	1528	1697	-	-	-
2000	6672289	900	998	6672301	1190	1321	6672313	1456	1617	6672325	1698	1886	-	-	-
2300	6672290	1035	1148	6672302	1369	1519	6672314	1674	1859	6672326	1952	2169	-	-	-
2600	6672291	1170	1298	6672303	1547	1717	6672315	1893	2102	6672327	2207	2452	-	-	-
3000	6672292	1350	1498	6672304	1785	1982	6672316	2184	2425	6672328	2547	2829	-	-	-

Altech Panel radiators with integrated connection set, Type D33

Surrounding brackets included.

The heat output values given are at a room temperature of 20 °C.

	Altech Type D33											
Height → (mm)	300				400				500			
Length ↓ (mm)	Right	Left	Watt 55/45	Watt 60/45	Right	Left	Watt 55/45	Watt 60/45	Right	Left	Watt 55/45	Watt 60/45
400	-	-	-	-	6672352	6672353	319	354	6672370	6672371	395	439
700	6672336	6672337	412	459	6672354	6672355	558	620	6672372	6672373	692	769
900	6672338	6672339	530	590	6672356	6672357	717	797	6672374	6672375	890	989
1000	6672340	6672341	589	655	6672358	6672359	797	886	6672376	6672377	989	1099
1200	6672342	6672343	707	786	6672360	6672361	957	1063	6672378	6672379	1187	1319
1300	6672344	6672345	766	852	6672362	6672363	1036	1152	6672380	6672381	1286	1429
1600	6672346	6672347	943	1049	6672364	6672365	1276	1418	6672382	6672383	1582	1758
1800	6672348	6672349	1061	1180	6672366	6672367	1435	1595	6672384	6672385	1780	1978
2000	6672350	6672351	1179	1311	6672368	6672369	1595	1773	6672386	6672387	1978	2198

	Altech Type D33							
Height → (mm)	600				900			
Length ↓ (mm)	Right	Left	Watt 55/45	Watt 60/45	Right	Left	Watt 55/45	Watt 60/45
400	6672388	6672389	464	515	6672406	6672407	604	673
700	6672390	6672391	812	902	6672408	6672409	1057	1178
900	6672392	6672393	1044	1160	6672410	6672411	1359	1514
1000	6672394	6672395	1160	1289	6672412	6672413	1510	1683
1200	6672396	6672397	1392	1547	6672414	6672415	1812	2019
1300	6672398	6672399	1508	1676	-	-	-	-
1600	6672400	6672401	1857	2063	-	-	-	-
1800	6672402	6672403	2089	2321	-	-	-	-
2000	6672404	6672405	2321	2578	-	-	-	-

Technical data

Description
Altech radiators with integrated connection set are made of steel sheet FePo1 AM. Steel thickness in accordance with EN 442-1, 1.20 +/- 0.09 mm, with a modern design profile with a pitch of 33 1/3 mm. They are equipped with Danfoss radiator valve RA-U BIV low-normal flow, 4 M22x1.5 c/c 40 mm connections, two G15 (1/2") threads for vents/plugs and with top grille and side panels.

Radiator depth (not including suspension brackets)
Type D11 60 mm
Type D21 77 ±2 mm
Type D22 100 ±2 mm
Type D33 158 ±2 mm

Connectors
4 x M22x1,5, c/c 40 mm

Pressure class
PN 10

Test pressure
13 bar

Paint coating
Dip coated colour
Code: RAL 9016

Heat output					
Altech Type D					
Height	Type	N-exp.	Weight kg/m	Output W/m*	Water volume l/m
300	11	1,29	9,2	587	1,9
	21	1,29	14,8	727	3,8
	22	1,31	16,3	873	3,8
	33	1,32	24,2	1160	5,7
400	11	1,29	13,9	773	2,6
	21	1,29	19,8	932	4,7
	22	1,3	22,2	1158	4,8
	33	1,32	33,2	1566	7,1
500	11	1,28	18,6	947	3,3
	21	1,3	24,8	1126	5,7
	22	1,31	28,2	1421	5,7
	33	1,32	42,2	1939	8,5
600	11	1,28	23,3	1110	4,0
	21	1,31	29,9	1310	6,7
	22	1,31	34,1	1662	6,7
	33	1,31	51,2	2271	10,0
900	11	1,28	33,9	1527	5,8
	21	1,33	43,9	1810	9,9
	22	1,33	50,4	2241	9,7
	33	1,35	75,9	3017	14,4

* Standard heat output EN 442-1 (75/65/20 °C).

Supply and return

Settings

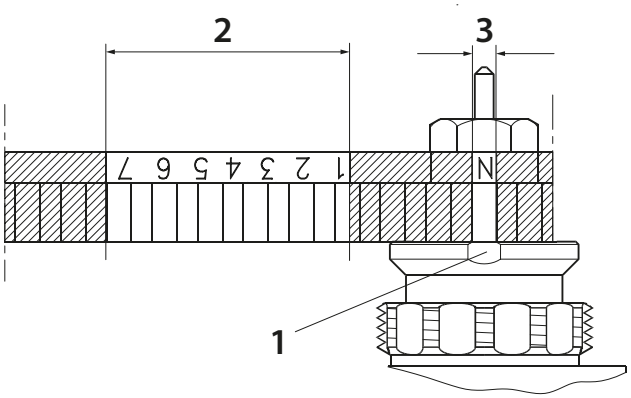

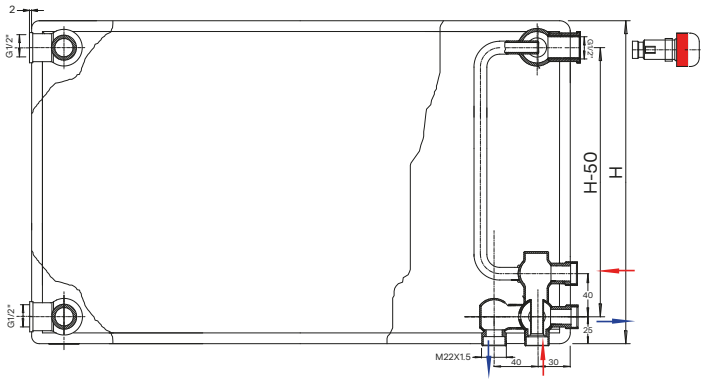

Connection	Preset									Max. water temp.	Diff.pressure (3)		Test pres-sure	Work. Pres-sure
	Kv-value (1, 2)								Kvs		Rec.	Tecn.		
	1	2	3	4	5	6	7	N	N	°C	bar	bar	bar	bar
G1/2A	0,04	0,05	0,07	0,09	0,13	0,18	0,24	0,34	0,55	120	0,05–0,2	0,6	16	10
"Lock" preset Kv value by locking the RA click-on mechanism on the thermostat, then it is not removable from valve.														

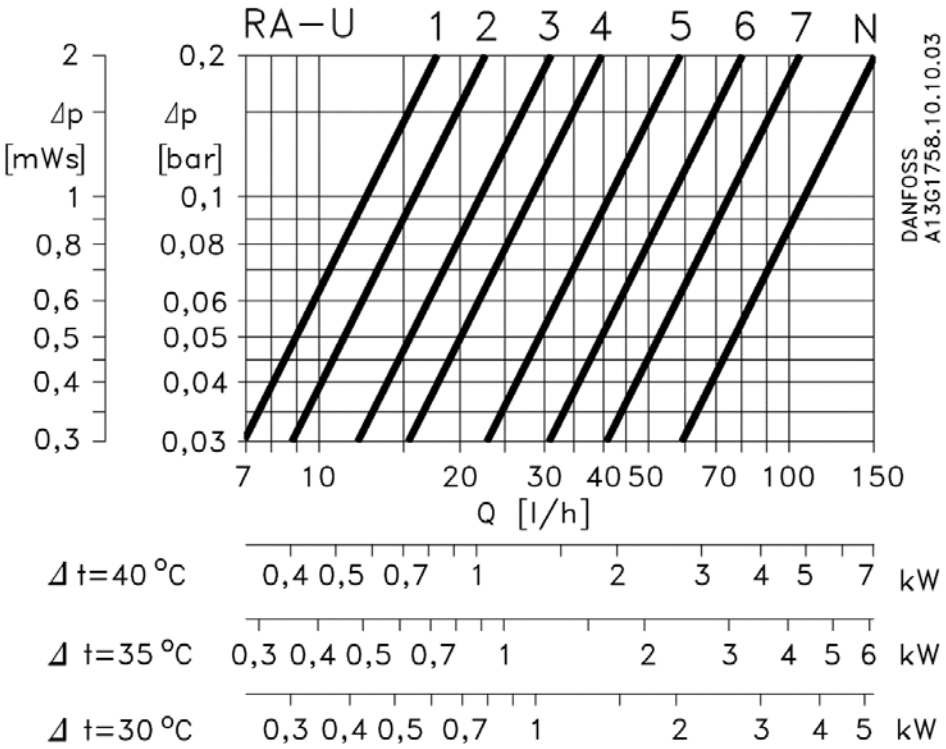

Installation instructions

Ensure good ventilation on installation in wet rooms to minimise condensation.

Packaging
All radiators are packaged using environmentally approved materials and can be connected without removing the packaging. The radiators are thus fully protected until building occupation.

On startup
1. Perform a visual check of fittings and connections. Check the fittings by feel to ensure they are properly tightened.
2. Perform leak testing in accordance with applicable industry rules and standards.
3. Retighten fittings and connections if necessary.

Radiator types, surrounding bracket, included

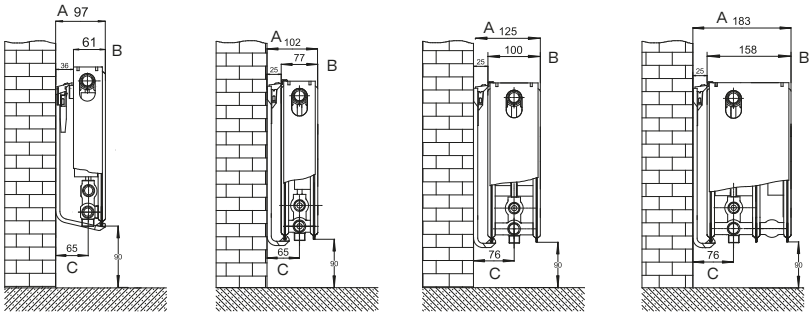

Type D11 Type D21 Type D22 Type D33

The Altech radiator with integrated connection set is equipped with suspension brackets and is supplied with brackets for surrounding installation.

Number of brackets:
400–1600 mm, 2 st.
1800–3 000 mm, 3 st.

Height (mm)	Type D11			Type D21			Type D22			Type D33		
	A	B	C	A	B	C	A	B	C	A	B	C
300–900 mm	97	61	65	102	77	65	125	100	76	183	158	76

Installation dimensions, surrounding brackets

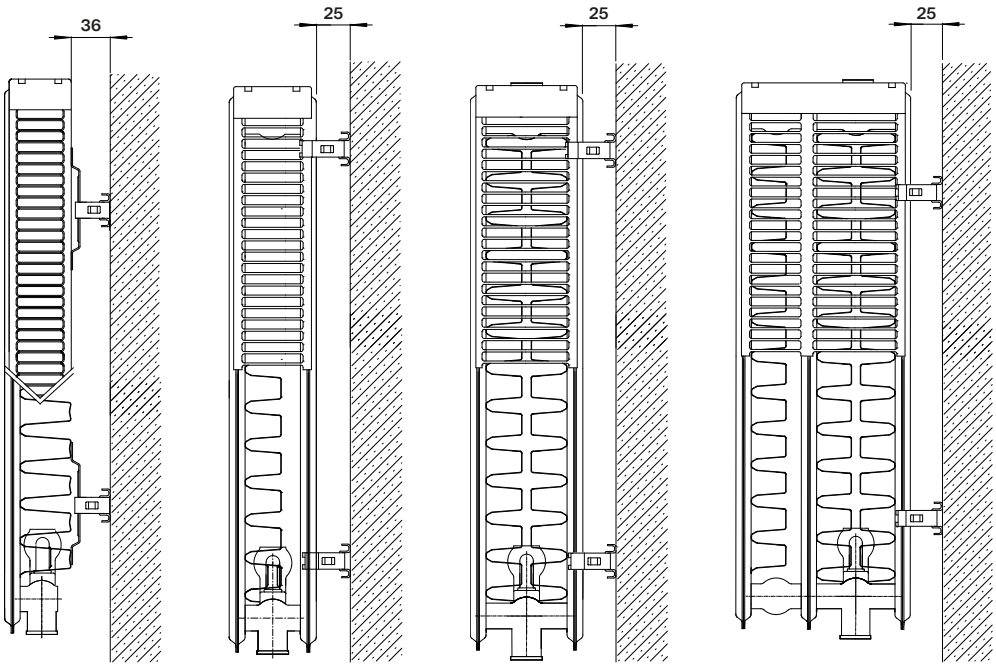

Type D11 Type D21 Type D22 Type D33

PANEL RADIATORS TYPE K

Altech panel radiator (type K) in standard design, which fits in every central heating system through its design with round corners and high quality. Supplied with side panels and a very robust top grille, which combine for an exclusive appearance. All Altech radiators are supplied complete with plugs, drains, vent screws and concealed brackets. Manufactured in accordance with EN 442-1.

The radiator is equipped with four R15 connections and with welded suspension points.

Dimensions

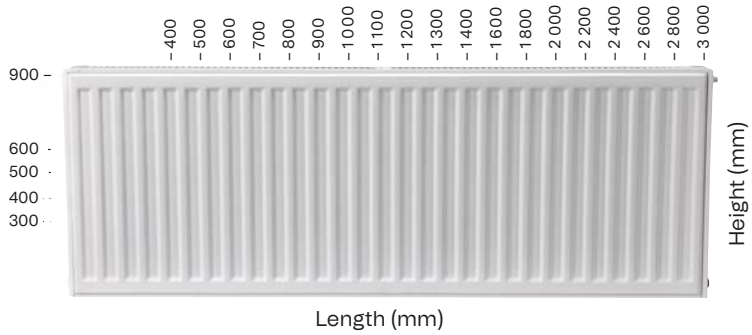

Concealed brackets (included).

Surrounding brackets (accessories).

Radiator types

Type 11

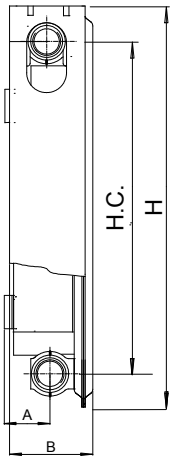

Type 21

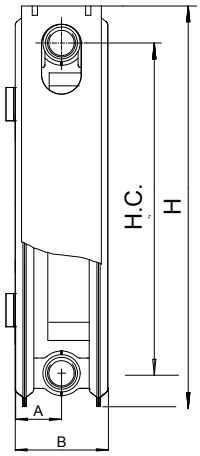

Type K22

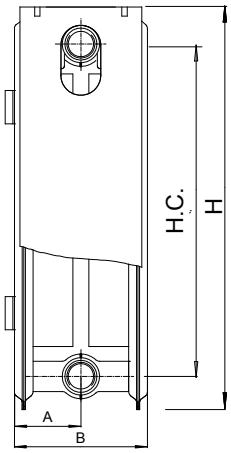

Type K33

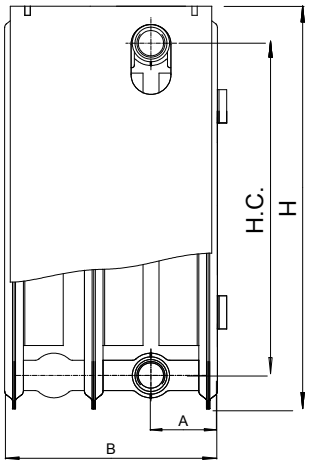

Altech Radiators Type K									
Height (mm)	H.C. (mm)	Type K11		Type K21		Type K22		Type K33	
		B	A	B	A	B	A	B	A
300	250 -2	61	37	77	38,5	100	50	158	50
400	350 -2	61	37	77	38,5	100	50	158	50
500	450 -2	61	37	77	38,5	100	50	158	50
600	550 -2	61	37	77	38,5	100	50	158	50
900	850 -2	61	37	77	38,5	100	50	158	50

* For Altech Type K, the total depth with suspension brackets is dimension B + 6,0 mm.

Product range

Altech Type K11
panel radiators

Concealed brackets (included).

The heat output values given are at a room temperature of 20 °C.

	Altech Type K11														
Height → (mm)	300			400			500			600			900		
Length ↓ (mm)	Item No.	Watts 55/45	Watts 60/45	Item No.	Watts 55/45	Watts 60/45	Item No.	Watts 55/45	Watts 60/45	Item No.	Watts 55/45	Watts 60/45	Item No.	Watts 55/45	Watts 60/45
400	6738700	111	123	6738719	146	162	6738738	179	198	6738757	209	232	6738776	289	321
500	6669680	139	154	6669694	183	203	6669718	223	248	6669736	262	290	-	-	-
600	6738702	167	184	6738721	219	243	6738740	268	297	6738759	314	348	-	-	-
700	6669681	195	216	6669697	256	284	6669726	313	347	6669737	367	406	-	-	-
800	6738704	222	247	6738723	292	324	6738742	357	396	6738761	419	464	-	-	-
900	6669684	250	277	6669700	329	365	6669730	402	446	6669740	471	522	-	-	-
1000	6738706	278	308	6738725	365	405	6738744	447	495	6738763	523	580	-	-	-
1100	6669513	306	339	6669687	402	446	6669704	491	545	6669733	576	638	-	-	-
1200	6738708	334	370	6738727	438	486	6738746	536	597	6738765	628	696	-	-	-
1300	6669678	362	401	6669693	475	527	6669705	581	644	6669735	680	754	-	-	-
1400	6738710	389	431	6738729	511	567	6738748	625	693	6738767	732	812	-	-	-
1600	6738711	445	493	6738730	584	648	6738749	715	792	6738768	837	929	-	-	-
1800	6738712	501	555	6738731	657	729	6738750	804	891	6738769	942	1045	-	-	-
2000	6738713	556	616	6738732	730	809	6738751	893	990	6738770	1046	1161	-	-	-
2200	6738714	612	678	6738733	803	890	6738752	982	1090	6738771	1151	1277	-	-	-
2400	6738715	667	740	6738734	876	971	6738753	1072	1189	6738772	1256	1393	-	-	-

Altech Type K21
panel radiators

Concealed brackets (included).

The heat output values given are at a room temperature of 20 °C.

Altech Type K21												
Height → (mm)	300			400			500			600		
Length ↓ (mm)	Item No.	Watts 55/45	Watts 60/45	Item No.	Watts 55/45	Watts 60/45	Item No.	Watts 55/45	Watts 60/45	Item No.	Watts 55/45	Watts 60/45
400	6738795	158	175	6738814	200	223	6738833	240	267	6738852	278	309
500	6669669	197	219	6669675	251	279	6669690	300	334	6669707	347	386
600	6738797	236	262	6738816	301	334	6738835	360	400	6738854	416	463
700	6669670	276	306	6669676	351	390	6669692	420	467	6669713	486	540
800	6738799	315	350	6738818	401	445	6738837	480	534	6738856	555	617
900	6669671	355	394	6669677	451	501	6669695	541	600	6669719	625	694
1000	6738801	394	437	6738820	501	556	6738839	601	667	6738858	694	771
1100	6669664	434	481	6669672	551	612	6669685	661	734	6669701	763	848
1200	6738803	473	525	6738822	601	668	6738841	721	801	6738860	833	926
1300	6669668	513	569	6669673	651	724	6669689	781	868	6669706	903	1003
1400	6738805	552	612	6738824	701	779	6738843	941	934	6738862	972	1080
1600	6738806	630	700	6738825	802	890	6738844	961	1068	6738863	1110	1234
1800	6738807	709	787	6738826	902	1001	6738845	1081	1201	6738864	1249	1388
2000	6738808	788	875	6738827	1002	1113	6738846	1201	1334	6738865	1388	1543
2200	6738809	867	962	6738828	1102	1224	6738847	1321	1468	6738866	1527	1697
2400	6738810	946	1050	6738829	1202	1335	6738848	1441	1601	6738867	1666	1851

Altech Type K22 panel radiators

Concealed brackets (included).

The heat output values given are at a room temperature of 20 °C.

Altech Type K22															
Height → (mm)	300			400			500			600			900		
Length ↓ (mm)	Item No.	Watts 55/45	Watts 60/45	Item No.	Watts 55/45	Watts 60/45	Item No.	Watts 55/45	Watts 60/45	Item No.	Watts 55/45	Watts 60/45	Item No.	Watts 55/45	Watts 60/45
400	6738890	201	223	6738909	256	285	6738928	306	341	6738947	351	391	6738966	471	525
500	6669665	252	279	6669682	320	356	6669696	383	426	6669711	439	489	6669734	589	656
600	6738892	302	335	6738911	384	427	6738930	459	511	6738949	527	587	6738968	707	788
700	6669666	352	391	6669683	448	498	6669698	536	596	6669712	615	685	6669748	825	919
800	6738894	402	477	6738913	512	569	6738932	612	681	6738951	703	783	6738970	943	1050
900	6669667	453	503	6669686	576	641	6669703	689	766	6669715	791	881	6669751	1061	1181
1000	6738896	503	558	6738915	640	712	6738934	765	851	6738953	879	978	6738972	1179	1313
1100	6669514	553	614	6669674	704	783	6669688	842	937	6669708	966	1076	6669727	1296	1444
1200	6738898	603	670	6738917	768	854	6738936	918	1022	6738955	1054	1174	6738974	1414	1575
1300	6669663	654	726	6669679	832	926	6669691	995	1107	6669709	1142	1272	6669732	1532	1707
1400	6738900	704	782	6738919	896	997	6738938	1071	1192	6738957	1230	1370	6738976	1650	1838
1600	6738901	804	893	6738920	1024	1139	6738939	1224	1362	6738958	1406	1566	6738977	1886	2100
1800	6738902	905	1005	6738921	1152	1281	6738940	1377	1533	6738959	1581	1761	6738978	2121	2363
2000	6738903	1005	1117	6738922	1281	1424	6738941	1530	1703	6738960	1757	1957	-	-	-
2200	6738904	1106	1228	6738923	1409	1566	6738942	1683	1873	6738961	1933	2153	6738980	2593	2888
2400	6738905	1206	1340	6738924	1537	1708	6738943	1836	2043	6738962	2109	2348	-	-	-
2600	6738906	1307	1452	6738925	1665	1851	6738944	1989	2214	6738963	2284	2544	6738982	3064	3413
2800	6738907	1408	1564	6738926	1793	1993	6738945	2142	2384	6738964	2460	2740	6738983	3300	3675
3000	6738908	1508	1675	6738927	1921	2136	6738946	2295	2554	6738965	2636	2935	6738984	3536	3938

Altech Type K33
panel radiators

Concealed brackets (included).

The heat output values given are at a room temperature of 20 °C.

Altech Type K33															
Height → (mm)	300			400			500			600			900		
Length ↓ (mm)	Item No.	Watts 55/45	Watts 60/45	Item No.	Watts 55/45	Watts 60/45	Item No.	Watts 55/45	Watts 60/45	Item No.	Watts 55/45	Watts 60/45	Item No.	Watts 55/45	Watts 60/45
400	6738985	287	319	6739004	367	407	6739023	440	488	6739042	505	562	6739061	670	746
500	6669710	359	399	6669721	459	509	6669729	550	611	6669745	632	703	6669758	837	932
600	6738987	431	479	6739006	550	611	6739025	659	733	6739044	632	843	6739063	1005	1118
700	6669714	503	559	6669722	643	713	6669731	769	855	6669747	884	983	6669759	1172	1305
800	6738989	575	638	6739008	734	815	6739027	879	977	6739046	1011	1124	6739065	1340	1491
900	6669716	647	718	6669723	826	917	6669738	989	1099	6669752	1137	1264	6669760	1507	1678
1000	6738991	719	798	6739010	917	1019	6739029	1099	1221	6739048	1263	1404	6739067	1675	1864
1100	6669699	790	877	6669717	1009	1121	6669724	1209	1343	6669739	1390	1545	6669753	1842	2051
1200	6738993	862	957	6739012	1101	1222	6739031	1319	1465	6739050	1516	1685	6739069	2010	2237
1300	6669702	934	1037	6669720	1193	1224	6669728	1429	1587	6669742	1642	1826	6669755	2178	2424
1400	6738995	1006	1117	6739014	1284	1426	6739033	1538	1738	6739052	1768	1966	6739071	2345	2610
1600	6738996	1150	1276	6739015	1468	1630	6739034	1758	1953	6739053	2021	2247	6739072	2680	2983
1800	6738997	1293	1436	6739016	1651	1834	6739035	1978	2198	6739054	2274	2528	6739073	3015	3355
2000	6738998	1437	1535	6739017	1835	2037	6739036	2198	2442	6739055	2526	2809	6739074	3350	3728
2200	6738999	1581	1755	6739018	2018	2241	6739037	2417	2686	6739056	2779	3090	6739075	3685	4101

Technical data

Description
Altech radiators are made of steel sheet FePo1 AM. Steel thickness in accordance with EN 442-1, 1.20 +/- 0.09 mm, with a modern design profile with a pitch of 33 1/3 mm. Types K11, 21, 22 and 33 are equipped with top grilles and side panels.

Radiator depth (not including suspension brackets)
Type 11 60 mm
Type 21 77 ±2 mm
Type 22 100 ±2 mm
Type 33 158 ±2 mm

Connectors
Standard, compact 4 x 1/2" RG

Pressure class
PN 10

Test pressure
13 bar

Paint coating
Dip coated colour
Code: RAL 9016

CE

Heat output					
Altech Type K					
Height	Type	N-exp.	Weight kg/m	Output W/m*	Water-vol. l/m
300	11	1,28	8,8	536	2,6
	21	1,30	14,68	766	3,5
	22	1,31	15,91	983	3,5
	33	1,30	24,32	1 398	5,2
400	11	1,29	11,5	705	2,73
	21	1,31	19,53	977	4,27
	22	1,32	21,45	1 259	4,27
	33	1,31	30,86	1 791	6,1
500	11	1,29	14,33	864	2,87
	21	1,31	23,84	1 175	5,03
	22	1,33	27,48	1 513	5,03
	33	1,32	38,61	2 153	7,0
600	11	1,30	17,27	1 014	3,0
	21	1,32	28,58	1 362	5,8
	22	1,35	31,88	1 747	5,8
	33	1,32	46,54	2 484	7,9
900	11	1,30	24,73	1 402	3,9
	21	1,34	41,97	1 868	7,7
	22	1,35	46,84	2 343	7,7
	33	1,34	69,53	3 316	10,22

Standard heat output EN 442-1 (75/65/20 °C).

Altech panel radiators are also available preassembled

1. Select radiator and Item No.
2. Which side is the connector to be on? Bottom or side connection?
   HS = right side
   VS = left side
   HB = bottom right
   VB = bottom left
3. Is the radiator for a 1 or 2-pipe system?
   1 = 1-pipe system
   2 = 2-pipe system
4. Which connection set?
   T = TA/IMI Hydronics
   D = Danfoss
   M = Markaryds Metallarmatur (MMA)
5. Specific requests?
   L = Low-flow
   B = Evoflow
   E = Eclipse
   Combine Item No. with points 2, 3, 4 and 5.

   Example
   Radiator K11, 1100 x 300 mm, Item No. 6669513
   Connection on bottom right (HB), 2-pipe system, (2) MMA connection set (M) and Evoflow (B)
   = Item No. 6669513-HB2MB

Ensure good ventilation on installation in wet rooms to minimise condensation.

Packaging
All radiators are packaged using environmentally approved materials and can be connected without removing the packaging. The radiators are thus fully protected until building occupation.

On startup
1. Perform a visual check of fittings and connections. Check the fittings by feel to ensure they are properly tightened.
2. Perform leak testing in accordance with applicable industry rules and standards.
3. Retighten fittings and connections if necessary.

Radiator types, concealed bracket, included

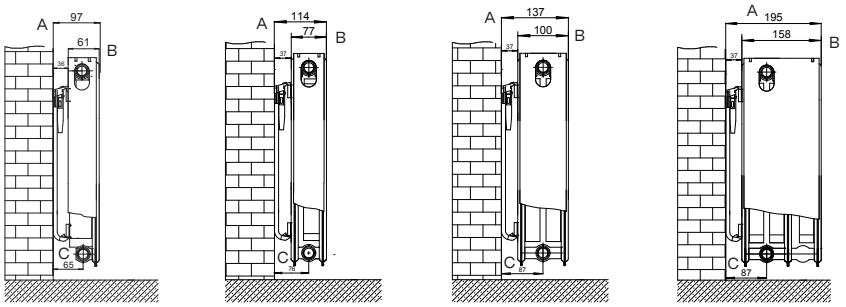

Type K11 Type K21 Type K22 Type K33

Altech radiators are equipped with mounting brackets and are supplied with brackets for concealed mounting.

Number of brackets:
400–1600 mm, 2 st.
1800–3 000 mm, 3 st.

Height (mm)	Type K11			Type K21			Type K22			Type K33		
	A	B	C	A	B	C	A	B	C	A	B	C
300–900 mm	97	61	65	114	77	76	137	100	87	195	158	87

Radiator types, surrounding bracket, accessories

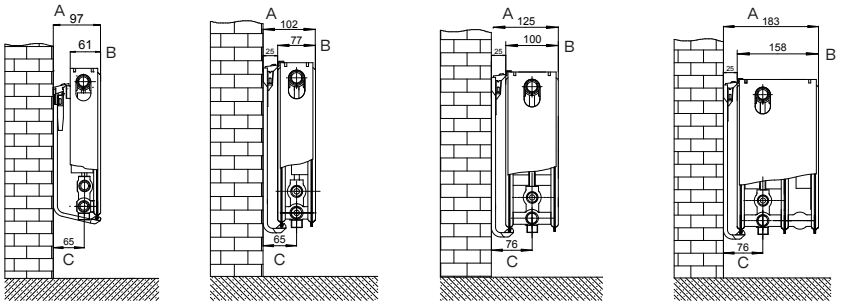

Type K11 Type K21 Type K22 Type K33

Height (mm)	Type K11			Type K21			Type K22			Type K33		
	A	B	C	A	B	C	A	B	C	A	B	C
300–900 mm	97	61	65	102	77	65	125	100	76	183	158	76

Installation dimensions, concealed brackets

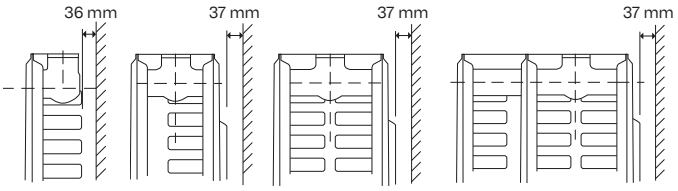

Type K11 Type K21 Type K22 Type K33

Installation dimensions, surrounding brackets

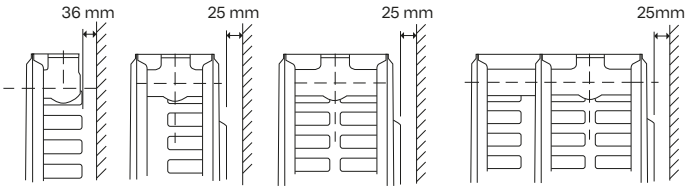

Type K11 Type K21 Type K22 Type K33

Spacer dimensions for brackets for radiators K11, 21, 22 and 33

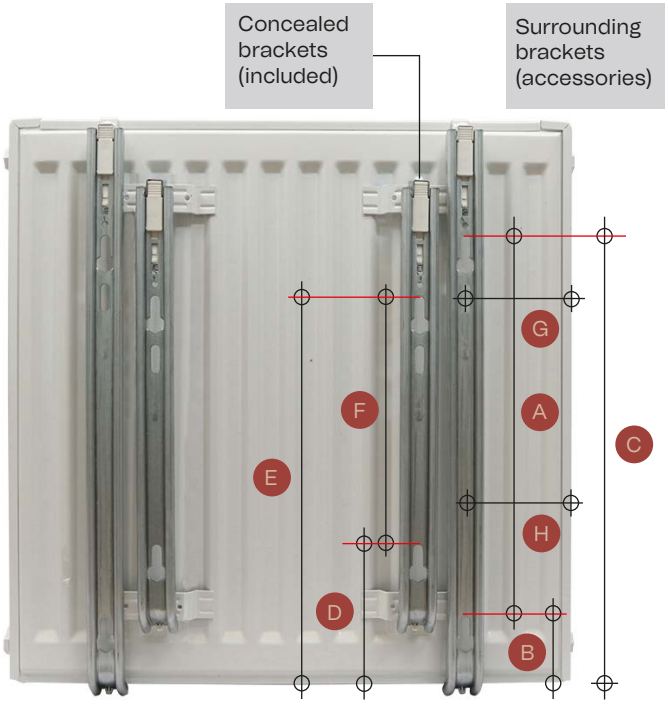

Concealed bracket Type K11/21/22/23					
				K11	K21, 22, 23
Height (mm)	D (mm)	E (mm)	F (mm)	G (mm)	G (mm)
300	137	-	-	150	133
400	128	240	112	150	133
500	128	340	212	150	133
600	128	440	312	150	133
900	128	540	612	150	133

Note! It is important to use both mounting points when installing.

Surrounding bracket Type K21/22/33				
Height (mm)	A (mm)	B (mm)	C (mm)	H (mm)
300	128	65	193	100
400	228	65	293	100
500	328	65	393	100
600	428	65	493	100
900	728	65	793	100

Note! It is important to use both mounting points when installing.

Partially surrounding bracket Typ K11			
Height (mm)	A (mm)	B (mm)	C (mm)
300	68	87	149
400	168	87	249
500	268	87	349
600	368	87	449
900	668	87	749

Note! It is important to use both mounting points when installing.

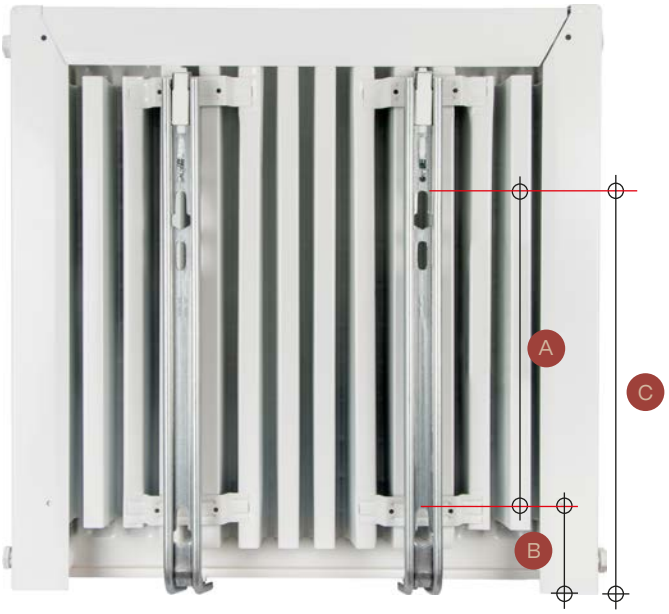

Maintenance instructions

Maintenance

Avoid abrasive or corrosive products such as scouring powder, steel wool etc. Do not use acids, acetone, thinner or other solvents.

Cleaning

1. Removing the top grille:
   1.1 Grasp the underside of the side panel (same side as vent screw).
   1.2 Lift upwards.
2. Clean with a damp cloth and mild detergent.
3. Use a specially designed nozzle for access behind the radiator when vacuuming.

Accessories

If the radiator is equipped with a radiator connection set or thermostat, please refer to the respective manufacturer for operation and maintenance information.

Accessories

	Top grille K11 /D11	Top grille K21 /D21	Top grille K22 /D22
Length	Item No.	Item No.	Item No.
400	6712092	6712114	6712134
500	6712093	6712115	6712135
600	6712094	6712116	6712136
700	6712096	6712117	6712138
800	6712097	6712118	6712139
900	6712098	6712119	6712140
1 000	6712099	6712120	6712141
1 100	6712100	6712121	6712142
1 200	6712101	6712122	6712143
1 300	6712102	6712123	6712144
1 400	6712104	6712124	6712146
1 600	6712105	6712125	6712147
1 800	6712106	6712126	6712148
2 000	6712107	6712127	6712149
2 200	6712108	6712128	6712150
2 300	–	6774021	6774022
2 400	6712109	6712130	6712151
2 600	6712110	6712131	6712153
2 800	6712112	6712132	6712154
3 000	6712113	6712133	6712155

	Top grille K33 /D33
Length	Item No.
400	6712156
500	6712157
600	6712158
700	6712159
800	6712161
900	6712162
1 000	6712163
1 100	6712164
1 200	6712165
1 300	6712166
1 400	6712167
1 600	6712168
1 800	6712169
2 000	6712170
2 200	6712171
2 400	6712172
2 600	6712173
2 800	6712174
3 000	6712175

Side panels type D

	Side panel type D11			
Height	Item No. (connection left side)	Item No. (vent right side)	Item No. (connection right side)	Item No. (vent left side)
300	6774024	6712176	6774023	6712242
400	6774026	6712177	6774025	6712243
500	6774028	6712179	6774027	6712245
600	6774030	6712180	6774029	6712246
900	-	-	-	-

	Side panel type D21		Side panel type D22	
Height	Item No. (connection side)	Item No. (vent side)	Item No. (connection side)	Item No. (vent side)
300	6774011	6712182	6774016	6712188
400	6774012	6712183	6774017	6712189
500	6774013	6712184	6774018	6712190
600	6774014	6712185	6774019	6712191
900	6774015	6712187	6774020	6712192

	Side panel typ D33			
Height	Item No. (connection left side)	Item No. (vent right side)	Item No. (connection right side)	Item No. (vent left side)
300	6774032	6712193	6774031	6712195
400	6774034	6712196	6774033	6712197
500	6774036	6712198	6774035	6712199
600	6774038	6712200	6774037	6712201
900	6774040	6712203	6774039	6712204

Side panels type K

	Side panel type K11	
Height	Item No. (left)	Item No. (right)
300	6712242	6712176
400	6712243	6712177
500	6712245	6712179
600	6712246	6712180
900	6712247	6712181

	Side panel type K21	Side panel type K22
Height	Item No.	Item No.
300	6712182	6712188
400	6712183	6712189
500	6712184	6712190
600	6712185	6712191
900	6712187	6712192

	Side panel type K33	
Height	Item No. (left)	Item No. (right)
300	6712195	6712193
400	6712197	6712196
500	6712199	6712198
600	6712201	6712200
900	6712204	6712203

Concealed brackets
Type K11, K21, K22 and K33

Brackets are mounted on the back of the radiator. Complies with requirements per VDI 6036. Supplied individually.

Fits type	Height	Item No.
K11, K21, K22 and K33	300 mm	6712220
K11, K21, K22 and K33	400 mm	6712221
K11, K21, K22 and K33	500 mm	6712222
K11, K21, K22 and K33	600 mm	6712223
K11, K21, K22 and K33	900 mm	6712224

Partly surrounding brackets for K11 and D11

Brackets attached to the top bracket and bottom of the radiator. Complies with requirements per VDI 6036. Supplied individually.

Fits type	Height	Item No.
K11, D11	300 mm	6712225
	400 mm	6712226
	500 mm	6712227
	600 mm	6712229
	900 mm	6712230

Floor bracket

Adjustable from floor 120–215 mm
Supplied individually.

Fits type	Item No.
Type D and K: 11*, 22 and 33	6736952
K21 and D21	6736953
*Note! Floor brackets K11 and D11 require an accessory kit, Item No. 6736954.	

No. of floor brackets			
Height 300–500 mm		Height 600–900 mm	
Length [mm]	No. of floor brackets	Length [mm]	No. of floor brackets
400–1800	2	300–1200	2
1900–3 000	3	1300–1800	3
		1900–2 400	4
		2 500–3 000	5

Accessory kit for floor bracket Fits	
Fits type	Item No.
K11 and D11	6736954

Surrounding brackets Type K and D 21, 22 and 33

Brackets for attachment to top of installed top grille. Complies with requirements per VDI 6036. Supplied individually.

Fits type	Height	Item No.
K21, K22 and K33 D21, D22 and D33	300 mm	6712231
	400 mm	6712232
	500 mm	6712233
	600 mm	6712234
	900 mm	6712235

School bracket/Safety bracket

Fits radiators with external connection set, type K. Installed together with concealed brackets. Complies with requirements per VDI 6036. Class AWK 4.

Fits type	Item No.
K11	6679000
K21	6712237
K22	6712238
K33	6712239

Bracket distance

Used for radiator bracket for increased distance from wall to centre connection.

Size	Item No.
3 mm	6606578
6 mm	6606579
12 mm	6606580

Accessory bag

Fits type	Includes	Item No.
K11 and D11 radiators	Vent nipple R15-1/2", plug R15-1/2", 2 wood screws T6S 8x75 WAF 13 and 2 screw plugs, Fischer UX 10x67-R7.	6712240

Altech

Radiator thermostats

For radiators type D, all Danfoss radiator thermostats and IMI radiator thermostats with item no. 4809251 and 4809252 are suitable. When using the MMA Evosense radiator thermostat, also use the MMA adapter with item no. 4805284.

	Item	Description	Item No.
	ALTECH		
	Altech thermostats with built-in sensor. Suitable for Altech radiator valve with fitting. No connection set	White/chrome, 28 °C, M30 x 1,5, 5 positions White/chrome, 23 °C, M30 x 1,5, 4 positions Chrome, 28 °C, M30 x 1,5, 4 positions	4757119 4757123 4757122
	Altech thermostat with remote sensor, 2.0 m. Fits Altech radiator valve with fitting. No connection set	White/chrome, M30x1,5, 2 m, 5 positions	4757124
	DANFOSS		
	Thermostat Aveo Tamper BIS Thermostat with built-in sensor. With extra hard plastic edge. For public and school environments. Assembly with 2 mm Hex key.	White 7–28 °C	6676006
	Thermostat Aveo Tamper RS Thermostat with remote sensor. With extra hard plastic edge. For public and school environments. Assembly with 2 mm Hex key.	White 7–26 °C	6676007
	Thermostat Aero RA/VL BIS Service thermostat with built-in sensor. For radiator valve RA/VL (older model) with 26 mm neck.	White 7–28 °C	6676011
	Thermostat Aero RA/VL RS Service thermostat with remote sensor. For radiator valve RA/VL (older model) with 26 mm neck.	White 7–26 °C	6676012
	Thermostat Aero RA/V BIS Service thermostat with built-in sensor. For radiator valve RA/V (older model) with 34 mm neck.	White 7–28 °C	6676013
	Thermostat Aero RA/V RS Service thermostat with remote sensor. For radiator valve RA/V (older model) with 34 mm neck.	White 7–26 °C	6676014
	Thermostat Aero RA click BIS Villa thermostat with built-in sensor. Unlimited with click-on. For all Danfoss RA valves.	White 7–28 °C	6676000
	Thermostat Aero RA click RS Villa thermostat with remote sensor. Unlimited with click-on. Can be limited. For all Danfoss RA valves.	White 7–26 °C	6676004
	Thermostat Aero RA click temperature limitation Thermostat with built-in sensor. Limited temperature range. With click-on.	White 7–22 °C (built-in sensor) White 7–23 °C (built-in sensor) White 7–21 °C (built-in sensor) White 7–21 °C (remote sensor RS)	6676002 6676003 6676001 6676005
	Thermostat Redia RA click BIS, temperature limitation Thermostat with built-in sensor. Limited temperature range. With click-on. For all Danfoss RA valves. 60-pack.	White 7–23 °C (IPC) White 8–21 °C White 8–22 °C (IPC) White 8–23 °C	6676016 6676008 6676009 6676010

	Item	Description	Item No.
	DANFOSS		
	Remote temperature adjuster RA 5062	White, with remote sensor, 2 m capillary tube	4818451
	Remote temperature adjuster RA 5065	White, with remote sensor, 5 m capillary tube	4818452
	IMI		
	Thermostat TRV Nordic Ø20	White 6–22 °C White 6–28 °C	4809251 4809252
	Thermostat TRV Nordic	White 6–28 °C White 6–21 °C White 6–22 °C	4809225 4809227 4809228
	Thermostat TRV-300	White, 6–27 °C with remote sensor, 2 m capillary tube	4809198
	Thermostat TRV-350	White 6–28 °C White 6–23 °C White 6–24 °C	4809181 4809179 4809180
	Adapter for MMA radiator thermostat on Danfoss		4805284
	MMA		
	Thermostat ENTL Evosense	White with removable sensor, 2+2 m capillary tube	4808767
	Thermostat Remote Evosense T10	White 5–49 °C, 1,5 m capillary tube	4808631

Radiator valves

	Item	Description	Item No.
	Danfoss RA-U BIV low-normal flow	Low–normal flow (installed on type D). Kv-value 0,04–0,55	4795907
	Danfoss RA-N BIV high flow	High flow. Kv-value 0,14–1,05	6678001

Other accessories

	Item	Description	Item No.
	Eccentric fitting MMA EXK female/male thread	G10 x 11 mm G15 x G 10 x 11 mm	4806118 4806119
	Eccentric	26 mm for M22 x 1,5	6606561
	Eccentric fitting	EX 2215	4806106
	Nipple with nut Straight AMETAL® nipple and nut, chrome plated	DN10 DN15	4819035 4819036
	Bend with nut, chrome plated	DN10 DN15	4819116 4819124
	Radiator fittings, straight without shutoff, nickel plated	DN10 DN15 DN20	4820114 4820122 4820130
	Radiator connection adapter fitting	DN15	4817787
	Bypass pipe without loop throttling	F22	4806024
	Cross fitting	MMA/X22	4819300
	Radiator fittings, elbow without shutoff, nickel-plated	DN10 DN15	4820411 4820429
	Altech return valve elbow with fittings for shutoff and presetting. Nickel plated	DN10 DN15	4821711 4821712
	Chrome plated plug with tapered seal	DN10 DN15	4820210 4820211
	FPL fitting set for PEX	M22 x 1,5, 16 x 2,0	1851054
	LK fitting	M22/AX16	1870646

	Item	Description	Item No.
	Vatette – plastic fitting set	Chrome plated for connection to radiators and distributors, with compression sleeve and M22 x1.5 nut for PEX, alu-PEX, PEM and PB pipes. 16 x 2.0–2.2 M22	1873823
	Connection fitting	M22/16K12 M22/16K15	1840002 1840003
	Combination fittings	R10 x 10 R10 x 12 R15 x 10 R15 x 12 R15 x 15 R20 x 22	4875225 4875241 *4875266 4875274 4875282 4875332
	Shutoff valve, straight, Purmo Thermopanel	Male thread x union nut M22 x 1,5 mm	6606019
	Shutoff valve, elbow, Purmo Thermopanel	Male thread x union nut M22 x 1,5 mm	6606020
	Altech return valve, straight with fittings	DN10 DN15	4821709 4821710
	Return valve, straight MMA	DN10 DN15	4821696 4821688
	Return valve, elbow TRIM	DN10 DN15	4823105 4823106
	Return valve, straight TRIM A	DN10 DN15	4873022 4873030
	Return valve, straight TRIM	DN10 DN15 DN20	4823099 4823100 4823101
	Altech radiator valve with fitting, straight	DN10, M30 x 1,5 DN15, M30 x 1,5	4757114 4757115
	Altech radiator valve with fitting, elbow	DN10, M30 x 1,5 DN15, M30 x 1,5	4757120 4757121
	Altech radiator valve with fitting, reversed	DN10, M30 x 1,5 DN15, M30 x 1,5	4757116 4757117

	Item	Radiator height/Description	Item No.
	Danfoss radiator connection set Connecting pipe	300 mm 400 mm 500 mm 600 mm 900 mm	4814737 4814746 4814752 4814747 4814757
	Danfoss radiator connection set	Valve body, 2-pipe Bottom, 2-pipe Valve body, 1-pipe Bottom, 1-pipe	4814758 4814759 4814942 4814941
	Danfoss radiator connection set Complete set, low flow	300 mm 400 mm 500 mm 600 mm 900 mm	4814928 4814929 4814931 4814932 4814933
	MMA radiator connection set Distributor including connecting pipe	Manifold, 2-pipe Manifold, 1-pipe	4806411 4806412
	MMA radiator connection set Regulator	300 mm 400 mm 500 mm 600 mm 900 mm	4806413 4806414 4806415 4806416 4806418
	MMA radiator connection set Regulator	300 mm 400 mm 500 mm 600 mm 900 mm	4806606 4806607 4788463 * 4788466 4788469
	IMI radiator connection set Tworett cross distributor TRV2-S, straight valve, low flow	300 mm, c/c 248-250 mm 400 mm, c/c 348-350 mm 500 mm, c/c 447-450 mm 600 mm, c/c 550 mm 900 mm, c/c 850 mm	4757663 4757668 4757674 4757679 4757686
	Altech radiator connection set With valve TRV-3, DN10, 2-pipe connected on bottom/side. For TA thermostats	300 mm, c/c 245-246 mm 400 mm, c/c 345-346 mm 500 mm, c/c 446 mm 600 mm, c/c 546 mm 900 mm, c/c 845-846 mm	4757662 4757667 4757673 4757678 4757685
	IMI radiator connection set Tworett single pipe distributor RVT RSD801, elbow valve and pipe	300 mm, c/c 345 mm 400 mm, c/c 446 mm 500 mm, c/c 450 mm 600 mm, c/c 546 mm	4757587 4757588 4757504 4757589

	Item	Description	Item No.
	Knob	White, M30x1,5	4809223
	TA knob	TRV-400/M30	4809214
	Danfoss knob	For Danfoss radiator valves series RA 2000	4818401
	Knob	MMA/ENH	4806097
	Knob	MMA/NHN for loose key	4805587
	Knob	MMA/NHK chrome plated	4806409
	Vent key	Vent key for radiator	4841102
	Presetting key for Altech radiator valve		4805850
	Plug, chrome plated	G15	6974286
	Vent screw, chrome plated	G15	6974285
	Chisel set	Chisel set for RA 2000	4818100

CONVECTORS

Altech convectors are especially suitable for installation below windows where a high heat output is required for optimal comfort. They can be installed on feet. The convectors are equipped with 6 female R15 connectors, 2 on each side and 2 on the bottom. The valve connection is on the right side.
They are supplied in white (RAL 9010). Manufactured in accordance with EN 442-1.
Operating pressure: max 8 bar.

Dimensions

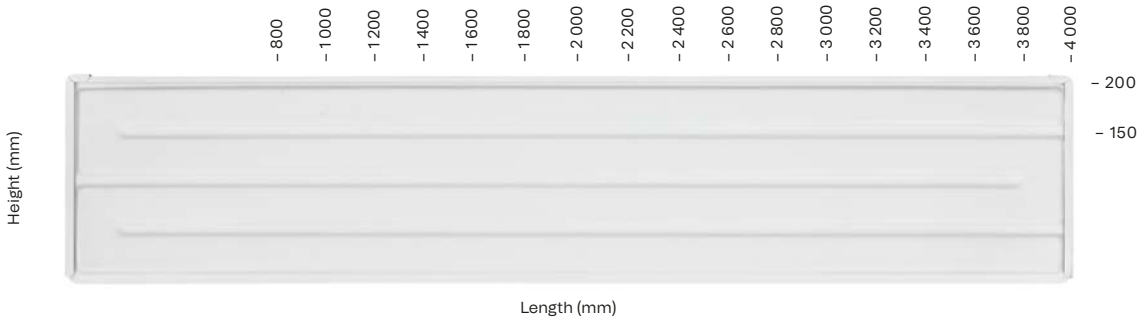

Type 22

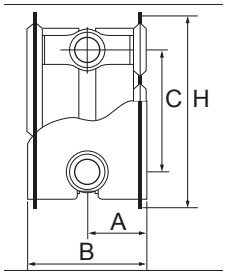

Height 150 mm	Height 200 mm
A=49 mm	A=49 mm
B=98 mm	B=98 mm
H=159 mm	H=209 mm
C=100 mm	C=150 mm

Type 33

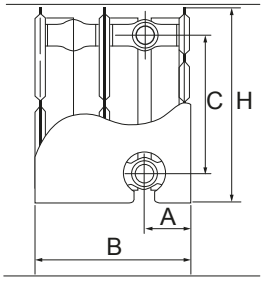

Height 150 mm	Height 200 mm
A=49 mm	A=49 mm
B=167 mm	B=167 mm
H=159 mm	H=209 mm
C=100 mm	C=150 mm

Note! VThe valve connection is on the right side. The convectors can be turned around. The connection pattern for type 33 is offset when turned.

Product range

Altech Convector Type 22, H150				
Item No.	Height	Width	Watts	
6739415	150	800	473	B
6739416	150	1 000	591	
6739417	150	1 200	709	
6739418	150	1 400	827	
6739419	150	1 600	946	
6739420	150	1 800	1 064	
6739421	150	2 000	1 182	
6739422	150	2 200	1 300	B
6739423	150	2 400	1 418	B
6739424	150	2 600	1 537	B
6739425	150	2 800	1 655	B
6739426	150	3 000	1 773	B
6739427	150	3 200	1 891	
6739428	150	3 400	2 009	B
6739429	150	3 600	2 128	B
6739430	150	3 800	2 246	B
6739431	150	4 000	2 364	B

Altech Convector Type 22, H200				
Item No.	Height	Width	Watts	
6739432	200	800	572	B
6739433	200	1 000	715	
6739434	200	1 200	858	
6739435	200	1 400	1 001	
6739436	200	1 600	1 144	
6739437	200	1 800	1 287	
6739438	200	2 000	1 430	
6739439	200	2 200	1 573	B
6739440	200	2 400	1 716	B
6739441	200	2 600	1 859	B
6739442	200	2 800	2 002	B
6739443	200	3 000	2 145	B
6739444	200	3 200	2 288	B
6739445	200	3 400	2 431	B
6739446	200	3 600	2 574	B
6739447	200	3 800	2 717	B
6739448	200	4 000	2 860	B

Altech Convector Type 33, H150				
Item No.	Height	Width	Watts	
6739449	150	800	675	B
6739450	150	1 000	844	
6739451	150	1 200	1 013	
6739452	150	1 400	1 182	
6739453	150	1 600	1 350	
6739454	150	1 800	1 519	
6739455	150	2 000	1 688	
6739456	150	2 200	1 857	B
6739457	150	2 400	2 026	B
6739458	150	2 600	2 194	B
6739459	150	2 800	2 363	B
6739460	150	3 000	2 532	B
6739461	150	3 200	2 701	B
6739462	150	3 400	2 870	B
6739463	150	3 600	3 038	B
6739464	150	3 800	3 207	B
6739465	150	4 000	3 376	B

Altech Convector Type 33, H200				
Item No.	Height	Width	Watts	
6739466	200	800	823	B
6739467	200	1 000	1 029	B
6739468	200	1 200	1 235	
6739469	200	1 400	1 441	
6739470	200	1 600	1 646	
6739471	200	1 800	1 852	
6739472	200	2 000	2 058	B
6739473	200	2 200	2 264	
6739474	200	2 400	2 470	B
6739475	200	2 600	2 675	B
6739476	200	2 800	2 881	B
6739477	200	3 000	3 087	B
6739478	200	3 200	3 293	
6739479	200	3 400	3 499	B
6739480	200	3 600	3 704	B
6739481	200	3 800	3 910	B
6739482	200	4 000	4 116	B

*Standard heat output in Watts (75/65/20 °C).
B = Special order, approx. 4 weeks delivery time.

Installation diagram

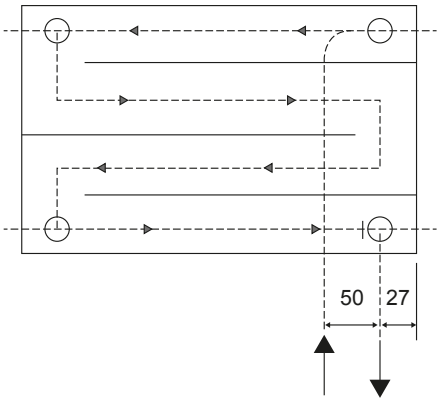

Connections

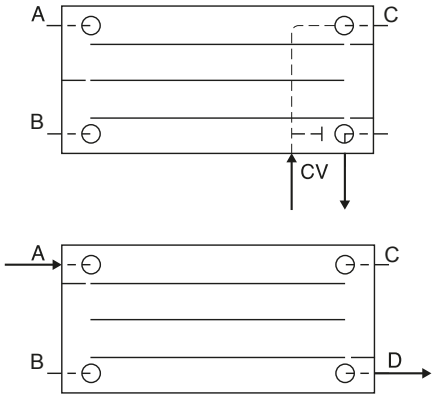

Three alternative installation examples are given below:

Example 1

Example 2

Example 3

Example 1. Installation with connection set

Select the connection set below after plugging connections B and CV with 3x Item No.: 6733790 (for example) and providing connection A with a vent screw Item No.: 6733791.

Compatible products		Fits convector	
Item No.	Description	height 150	height 200
4795843 + 4813777 + pipe	Independent installation (TA)	Ok **	Ok **
4757663	Tworett TRV-3 R C/C 248-250		Ok **
4757587 *	Flowrett RVT RSD801 C/C345-346	Ok **	Ok **
4806413	MMA regulator VR 250 VM CC250		Ok **
4806411	MMA two-pipe distributor FA-M		Ok
4806412	MMA single-pipe distributor FA-M		Ok
4817790	Danfoss 600 RA-K-VB M22x12	Ok **	Ok **
Connect selected fitting with two adapters, Item No.: 4817787 in C and D. Then select a suitable thermostat.			
* Special order Ok = Fits ** Requires cutting of pipes			

Example 2. Installation with radiator connection and return valve

1. Plug B, D and CV with Item No. 6733790 (3x). Vent screw (6733791) in A.
2. Connect radiator valve with fitting (4757115), bend with nut (4819124) in C.
3. Connect return valve (4823100) with nipple and nut (4819036) on bottom, CV. Altech alternative 4821710.
4. Select correct thermostat.

Example 3. Installation connected on bottom

5. Plug B and CV with Item No. 6733790 (3x). Vent screw (6733791) in A.
6. Connect valve insert, Item No. 4818950 in C.
7. Connect 2 return valves with shutoff (4823100) together with nipples and nuts (2x No. 4819036) in the bottom connections. Altech alternative 4821710.
8. Select correct thermostat.

On startup

1. Perform a visual check of fittings and connections. Check the fittings by feel to ensure they are properly tightened.
2. Perform leak testing in accordance with applicable industry rules and standards.
3. Retighten fittings and connections if necessary.

Accessories

Floor brackets

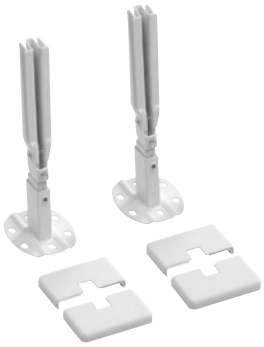

Item	Description	Item No.
Altech floor bracket	For floor mounting, adjustable between 138–188 mm. Supplied in pair.	166250
Altech floor bracket	For installation cast in floor, adjustable between 250–348 mm. Supplied in pair.	166251

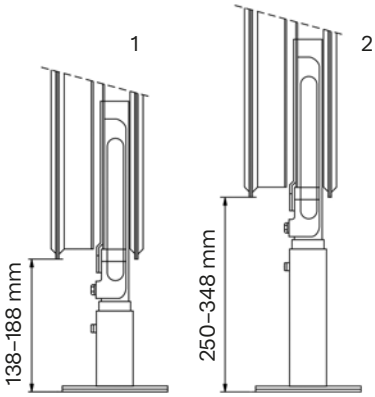

Floor bracket installation options

1. Floor bracket, Item No. 166250, for floor mounting.
2. Floor bracket, Item No. 166251, for cast installation in floor.

Number of floor brackets:	
800–1800 mm	2 st
2 000–3 000 mm	3 st
3 200–4 000 mm	4 st

Valve insert for thermostat

Description	Item No.
With M28 x 1.5 connection	4818950

Maintenance instructions

On startup

1. Check all fittings and connections.
2. Perform leak testing in accordance with applicable industry rules and standards.
3. Retighten fittings and connections if necessary.

Maintenance

Avoid abrasive or corrosive products such as scouring powder, steel wool etc. Do not use acids, acetone, thinner or other solvents.

Cleaning

1. Removing the top grille:
   1.1 Grasp the underside of the side panel (same side as vent screw).
   1.2 Lift upwards at an angle.
2. Clean with a damp cloth and mild detergent.
3. Use a specially designed nozzle for access behind the convector when vacuuming.

Accessories

If the convector is equipped with a radiator connection set or thermostat, please refer to the corresponding manufacturer for operating and maintenance information.

WARRANTY CONDITIONS

This warranty applies only on installation by plumbing professionals.
No repairs for which any claims will be requested shall be started before contacting SGDS Gruppen AB and Altech.

In the event of a justified claim, Altech reserves the right to correct the damage to the product for which the claim is filed. Claims for replacement will not be accepted for products that:

1. Have been stored outdoors.
2. Leak from inside caused by corrosion due to poor water quality in the system, for example.
3. Are surface coated by other suppliers than Altech.
4. Are exposed to aggressive vapours or liquids.
5. Are installed in areas with high humidity and/or inadequate ventilation.
6. Have been deformed due to
   - Excessive system test pressure
   - Effects of frost
   - Excessive static pressure.

Products can only be replaced on agreement with SGDS Gruppen AB and Altech.

All products for which claims are filed and that are returned to SGDS Gruppen AB / Division Dahl and Altech must be provided with a special return slip that has been completely filled out. SGDS Gruppen AB / Division Dahl and Altech cannot handle claims without this return slip.

The right to make technical changes is reserved.

AA VVS 09 shall also apply unless agreed otherwise in writing.

Altech convectors and radiators are manufactured in accordance with SS-EN442-1 and tested in accordance with SS-EN442-2. Altech therefore provides a 5-year warranty for both the product and the surface coating. In the event of a justified claim, full compensation will be paid for the affected product.

Altech

Distributed by Dahl Sverige AB
For technical support, please contact us at
020-55 11 00 or tks@altech.nu

AH-102_Version date: 21-10-2026