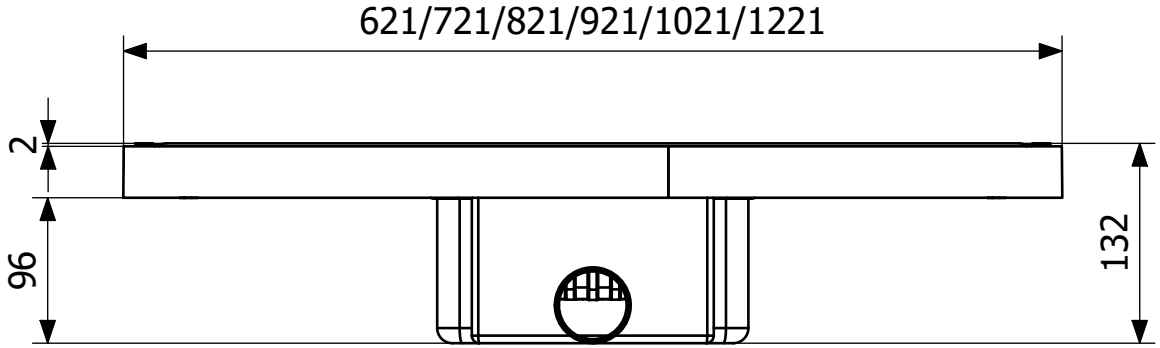
621/721/821/921/1021/1221
2
96
132

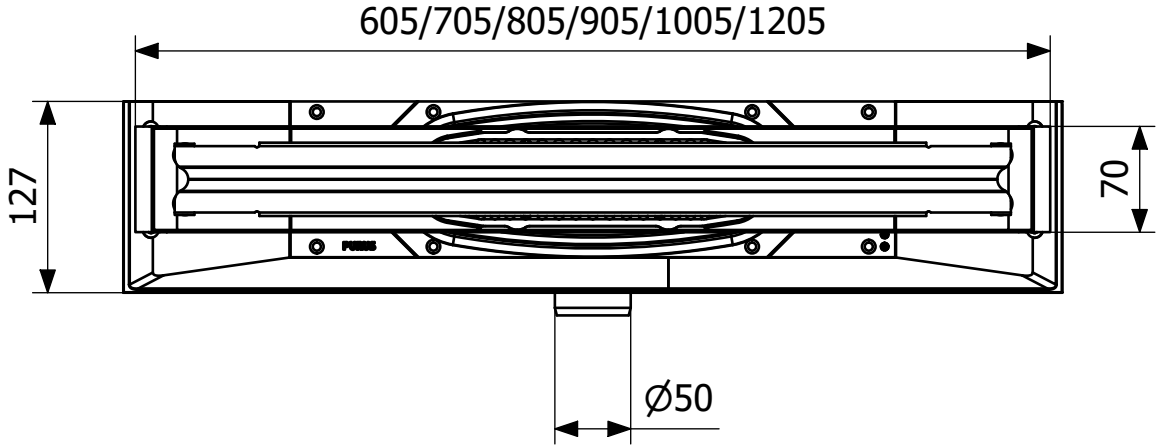
605/705/805/905/1005/1205
127
70
Ø50