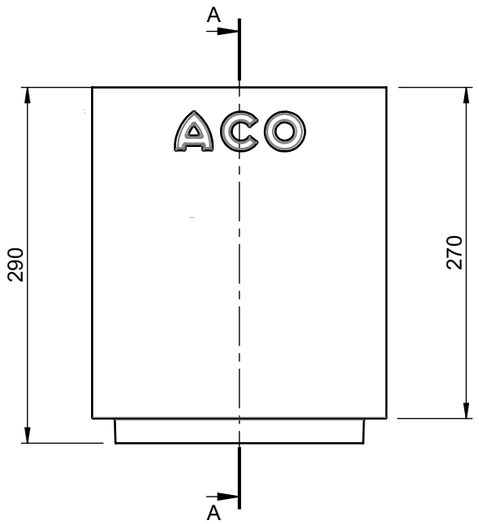

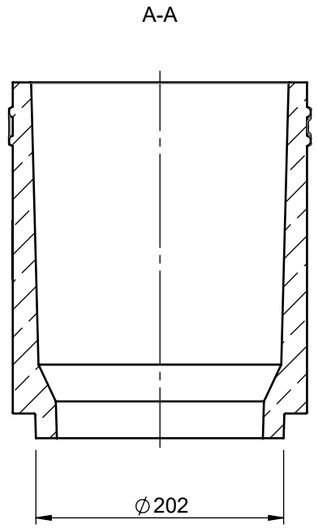

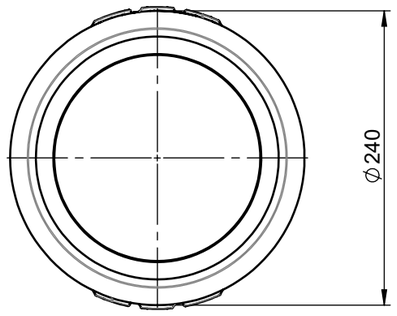

local article number: 319606

ACO Hochbau
Vertrieb GmbH
24755 Rendsburg, Postfach 320
Tel. +49 4331 354-410
Fax. +49 4331 354-360
www.aco-hochbau.de

created by: mchakrapani	reviewed by: plingner	drawing-no.: **1082681-M**	index: **001**
		documenttype: marketing drw.	
		projection:ISO-E	scale: 1:5

title:

ACO Self yard gully

Extension element PB4 height-270mm round - with label

Aufsatzelement PB4 BH-270mm rund - mit label

serial-released

release date: 2019-09-06 11:43

sheet: 1/1