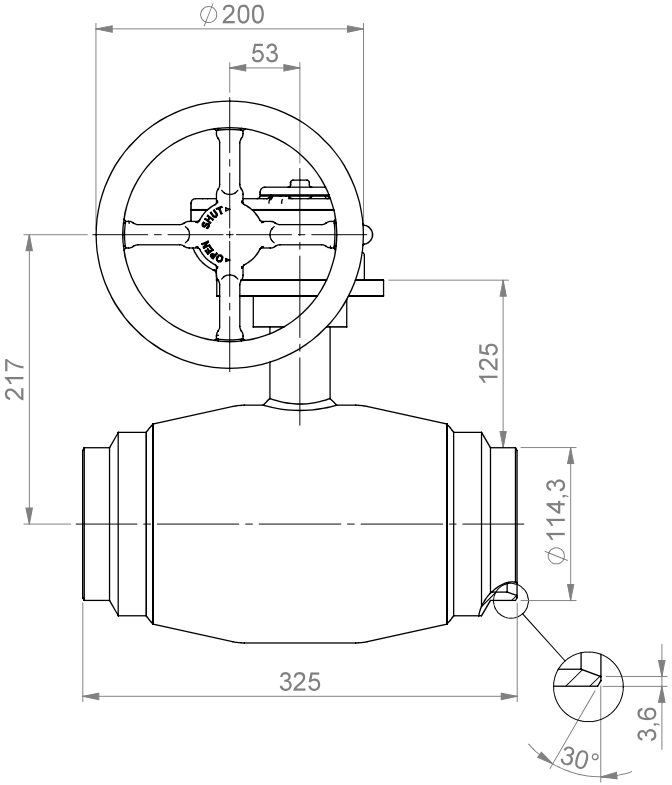

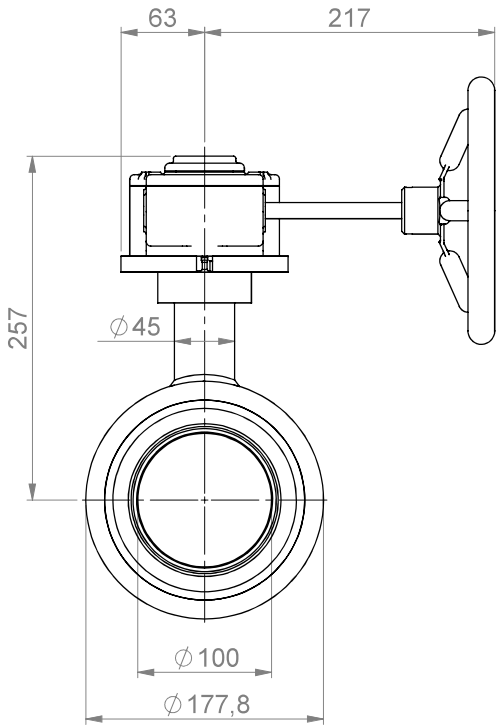

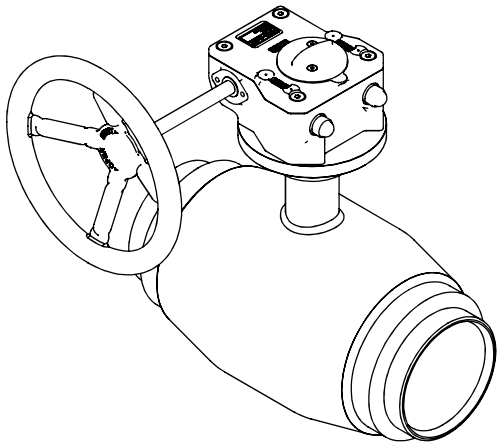

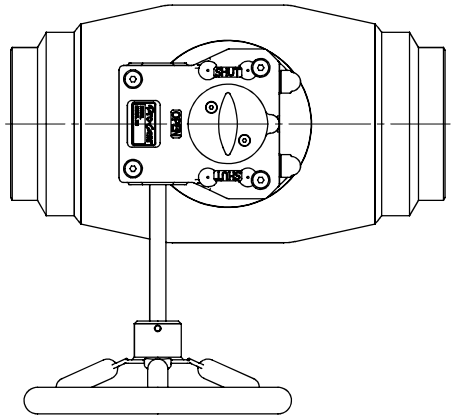

Main dimension drawing for customer use	Weight kg	Description Steel ball valve DN100 W/W Full bore, with manual gear Pro-Gear Q400S (F10 - []20<45°) W-200/12
Drawn by MAk 02.10.2017	VEXVE www.vexve.com	Drawing number 154100-C
Approved by SSi 03.10.2017		Product number 154100

The information contained in this drawing is the sole property of Vexve Oy. Any reproduction in part or as a whole without the written permission of Vexve Oy is prohibited. Units in mm