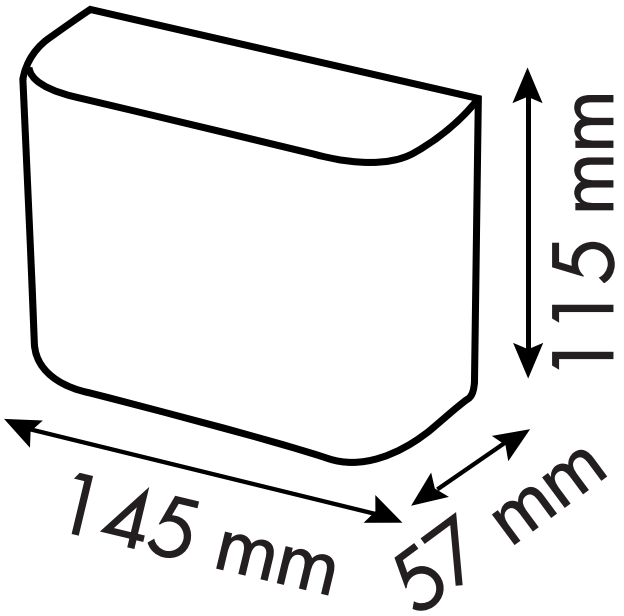
115 mm
145 mm
57 mm